AT&T WIC, WUC and Generator Foundation Ordering Guide

1-800-453-0050
www.emiproducts.com
11230 Neeshaw Drive, Houston, Texas 77065

Table of Contents

WIC Platform	Page
80” x 80” WIC Gravity/Pad Mount	4
10’ x 10’ WIC Gravity/Pad Mount	4
WIC Helical Mount	5
WIC Concrete Mount	6

WIC/Combo Platforms	Page
182” x 80” WIC/Combo Elevated Platform	7
230” x 145” WIC/Combo Elevated Platform	8
230” x 145” WIC/Combo Elevated Platform w/o helicals	9
166” x 80” WIC/Combo Gravity Mount Skid Platform	10
166” x 80” WIC/Combo Helical Mount Grade Platform	11
166” x 80” WIC/WICG Gravity Mount Skid Platform	12
166” x 80” WIC/WICG Helical Mount Grade Platform	13

WUC Platform	Page
95” x 33” DELTA WUC - Helical Mount Skid	15
102” x 75” WUC Gravity/Pad Mount	17
156" x 106" WUC - 3Bay/Genset Gravity/Pad Mount	18
180” x 87 ¼” WUC/Combo Platform w/ Canopy	19
180” x 87 ¼” WUC/Combo Platfrom w/o Canopy	20
180” x 87 ¼” WUC/Combo Platform w/ Mesh Canopy	21

Generator Platforms	Page
192" x 120" Generator up to 50 kW Elv. Platform w/ Stairs	22
192" x 120" Generator up to 50 kW Elv. Platform w/ Ladder	23

Generator Platforms Cont.	Page
156” x 106” Generator up to 50 kW Grav/Pad Mnt Platform	24
9' x 4' Pad Mount Generator Platform	25
10' x 4' Pad Mount Generator Platform	25
8' x 4” Helical Mount Generator Platform	26
72” x 53” Helical Mount Generator Platform	27
144” x 53” Helical Mount Generator Platform	28
53” x 36” Vertical Generator Pad Mount Plinth	29
228” x 43 ⅜” Generator Plinth Kit	30

Foundations	Page
6” Diameter x 7’ Quad Mount Helical Kit	31
10” Diameter x 10’ Single Stud Mount Helical Kit (4 Pk)	32
10” Diameter x 21’ Triple Flight Helical & Ext. Kit (7 Pk)	33
6” Dia. Pad Mount Extension Single Stud Mount (4 Pk)	33
10” Diameter Foundation Extensions	34

Accessories	Page
Platform Extension “Wing” Kit	14
Single Step Stair Kit	35
WIC & Genset Platform Fully Grated Conversion Kit	35
Canopy for WIC - WUC Outdoor Platform - 0146	36
114" X 144" Pad Mount Canopy	37
302" X 130" Pad Mount Solar Canopy Frame & Panel kits	37

AT&T WIC [WALK IN CABINET]

AT&T Standards determine the selection of foundation type.

1. Helical - 92% locations nationwide (standard option).

2. Concrete Pier/Gravity Mount - Rocky terrain/mountain top locations (where helical is not an option due to ground conditions).

3. Concrete Pad - Existing pad (no new pouring). Space available on the existing pad due to decomission of legacy enclosures, relocation.

80" x 80" WIC Gravity/Pad Mount

Part Number
AT&T- CEQ.53686 **EMI-** 1000-0000-0103 ⭳ ⭳ Click the **EMI** part number to download drawing.
Description
80" x 80" WIC gravity/pad mount platform kit, 2-step stair with leveling hardware.
Part Number
AT&T- CEQ.46388 **EMI-** 1000-0000-0162 ⭳ ⭳ Click the **EMI** part number to download drawing.
Description
10' x 10' WIC gravity/pad mount platform kit, 2-step stair with leveling hardware.

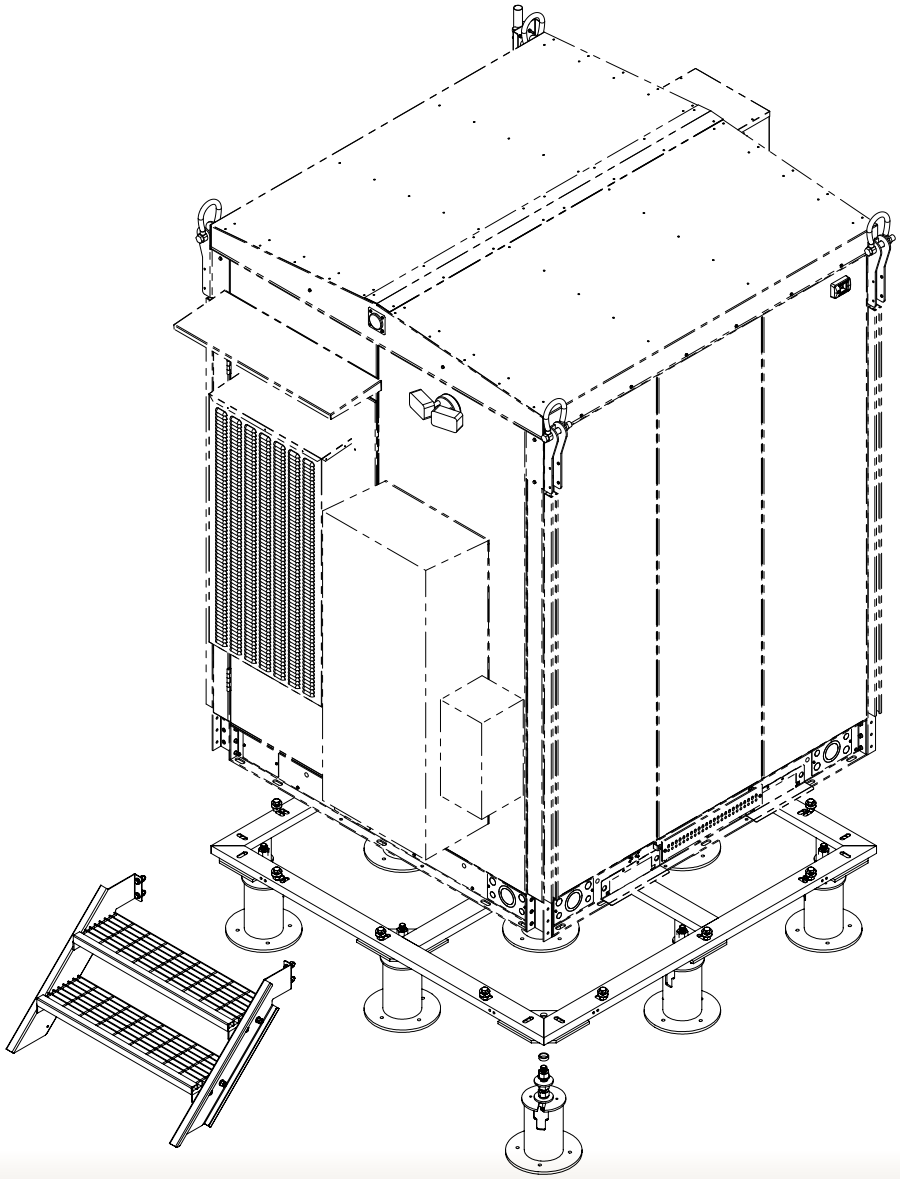

WIC Helical Mount

Part Number
AT&T- CEQ.53680 **EMI-** 1000-0000-0101 ⭳
⭳ Click the **EMI** part number to download drawing.
Description
WIC corner mount helical kit, 2-step stair with leveling hardware.

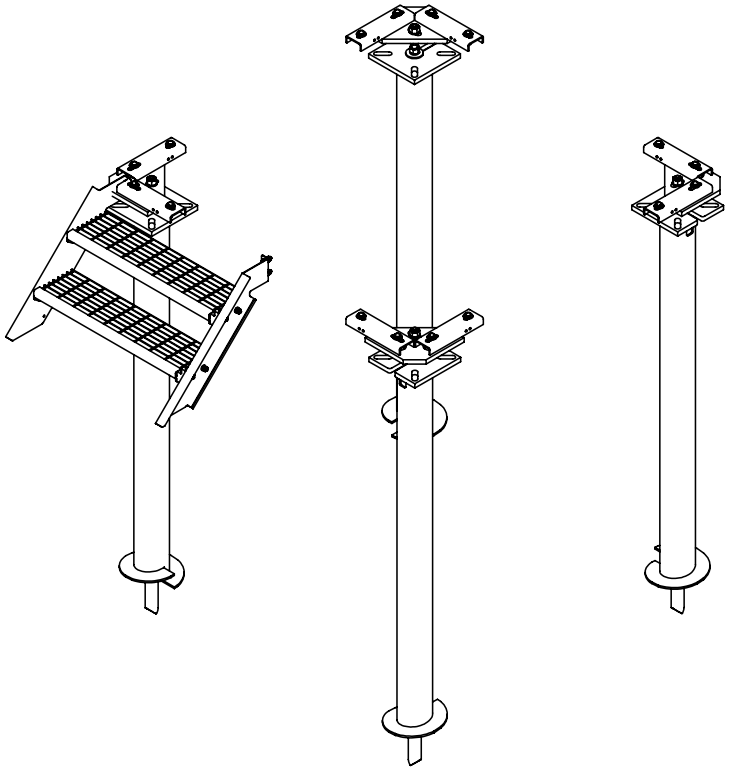

WIC Concrete Mount

Part Number
AT&T- CEQ.53655 **EMI-** 1007-0000-0012 ⭳ ⭳ Click the **EMI** part number to download drawing.
Description
WIC pad mount corner kit, 17” mounting feet, 2-step stair with leveling hardware.

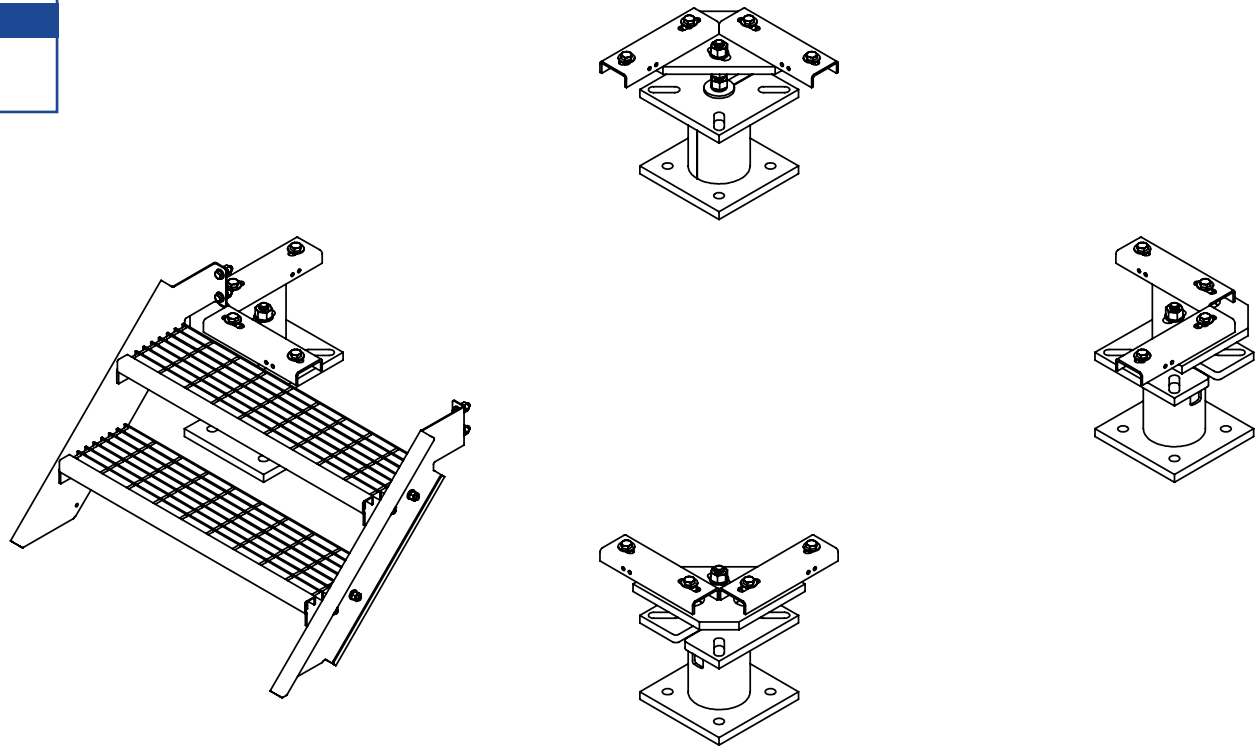

182" x 80" WIC/Combo Elevated Platform

Part Number		Elevation
AT&T- CEQ.53687	EMI- 1000-0010-0090-03	3 ft
AT&T- CEQ.*****	EMI- 1000-0010-0090-04	4 ft
AT&T- CEQ.53670	EMI- 1000-0010-0090-06	6 ft

Click the **EMI** part number to download drawing.

Description

Elevated WIC-genset combo platform kit, 182" x 80" for 3' to 6' elevations. Includes helicals and entry stair.

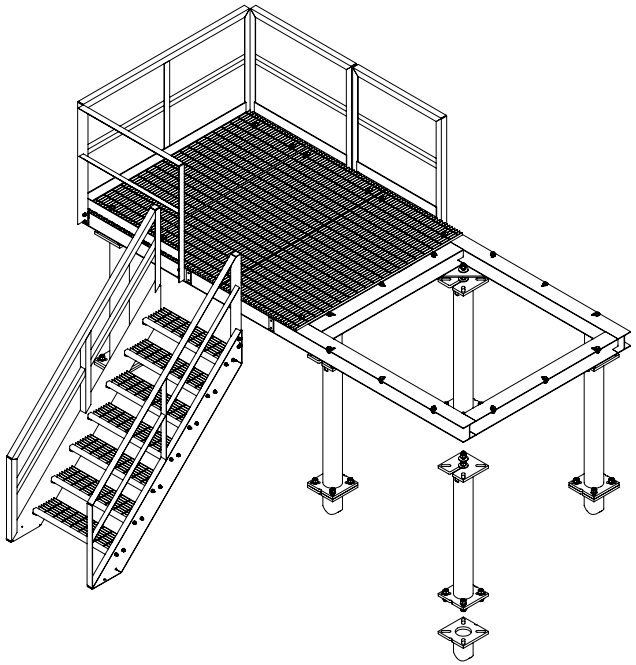

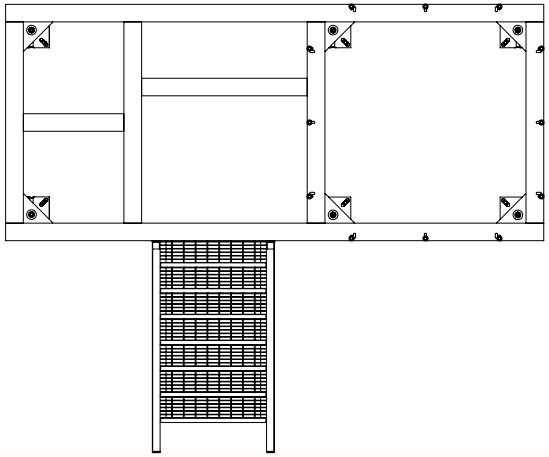

GRATING REMOVED FOR CLARITY

WUC/Combo Elevated Platform Required Conversion Kit & Optional Canopy [0146]

Part Number		Elevation
AT&T- CEQ.53671	EMI- 1000-0010-0146-04	4 ft
AT&T- CEQ.53666	EMI- 1000-0010-0146-06	6 ft
AT&T- CEQ.53656	EMI- 1000-0010-0146-08	8 ft
AT&T- CEQ.53659	EMI- 1000-0010-0146-10	10 ft
AT&T- CEQ.53664	EMI- 1000-0010-0146-12	12 ft
AT&T- CEQ.57514	EMI- 1000-0010-0146-14	14 ft
AT&T- CEQ.57484	EMI- 1000-0010-0146-16	16 ft
AT&T- CEQ.57525	EMI- 1000-0010-0146-18	18 ft
AT&T- CEQ.57510	EMI- 1000-0010-0146-20	20 ft

Click the **EMI** part number to download drawing.

Description

Elevated WUC-genset combo platform kit, 230"x145" up to 30KW Genset on the back. Includes 10" dia. helical foundations and entry stair. 90 degree landing included in all elevations

Part Number

AT&T- CEQ.57485 EMI- 1001-0030-0036

Description

184" x 117" bolt together canopy for WIC and WUC outdoor platform series 1000-0010-0146 and 1000-0010-0557.

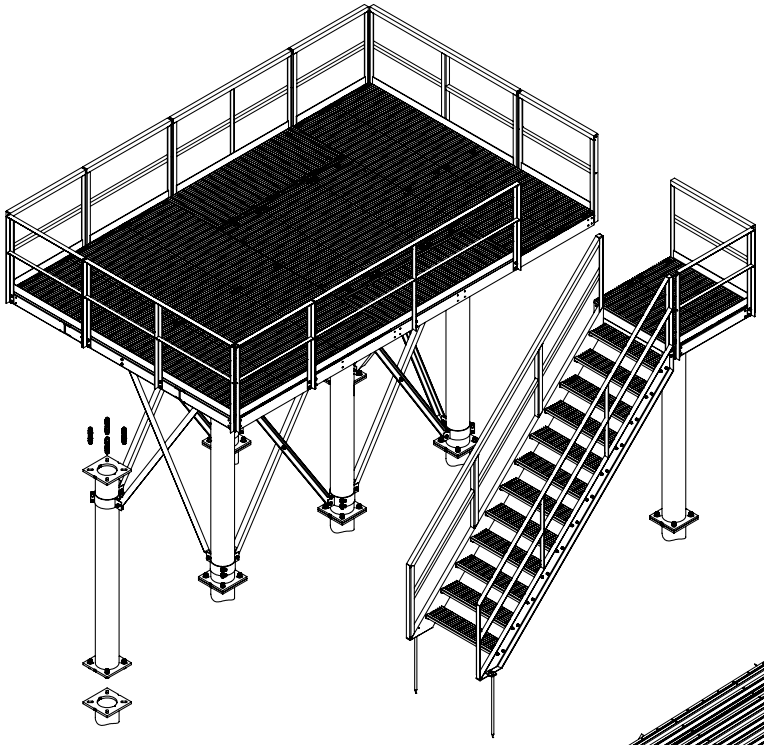

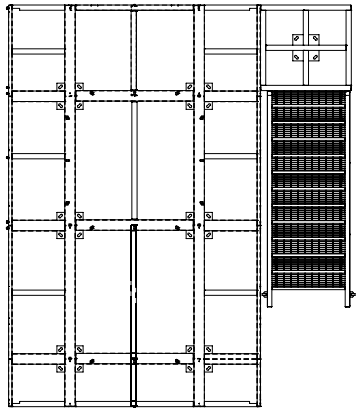

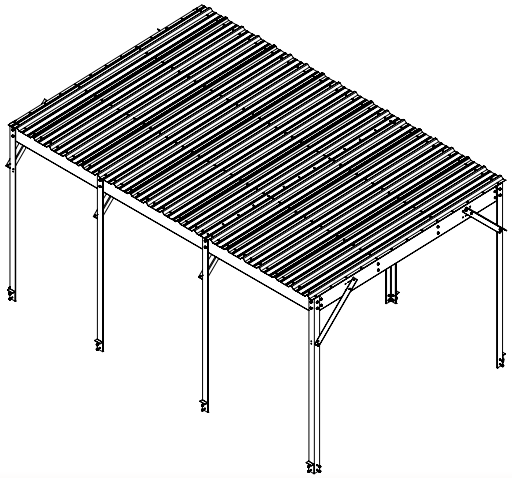

EMI 1000-0010-0146-04 series platforms are approved for use with the included helical kit, provided that presumptive soil values listed in Annex F of TIA-222-H are met. It is the responsibility of the Owner to verify that site-specific soil conditions meet or exceed the mechanical properties referenced in Annex F. For platforms with elevations greater than 4'-0", contact EMI for project-specific foundation design and verification.

WUC/Combo Elevated Platform Required Conversion Kit & Optional Canopy [0557]

Part Number		Elevation
AT&T- CEQ.59829	EMI- 1000-0010-0557-04	4 ft
AT&T- CEQ.59822	EMI- 1000-0010-0557-06	6 ft
AT&T- CEQ.59814	EMI- 1000-0010-0557-08	8 ft
AT&T- CEQ.59831	EMI- 1000-0010-0557-10	10 ft
AT&T- CEQ.59827	EMI- 1000-0010-0557-12	12 ft
AT&T- CEQ.59824	EMI- 1000-0010-0557-14	14 ft
AT&T- CEQ.59825	EMI- 1000-0010-0557-16	16 ft
AT&T- CEQ.59832	EMI- 1000-0010-0557-18	18 ft
AT&T- CEQ.59833	EMI- 1000-0010-0557-20	20 ft

Click the **EMI** part number to download drawing.

Description

Elevated WUC-genset combo platform kit, 230”x145” up to 30KW Genset on the back. Includes entry stair. 90 degree landing included in all elevations. Does not include helical foundations.

Part Number

AT&T- CEQ.57485 EMI- 1001-0030-0036

Description

184” x 117” bolt together canopy for WIC and WUC outdoor platform series 1000-0010-0146 and 1000-0010-0557.

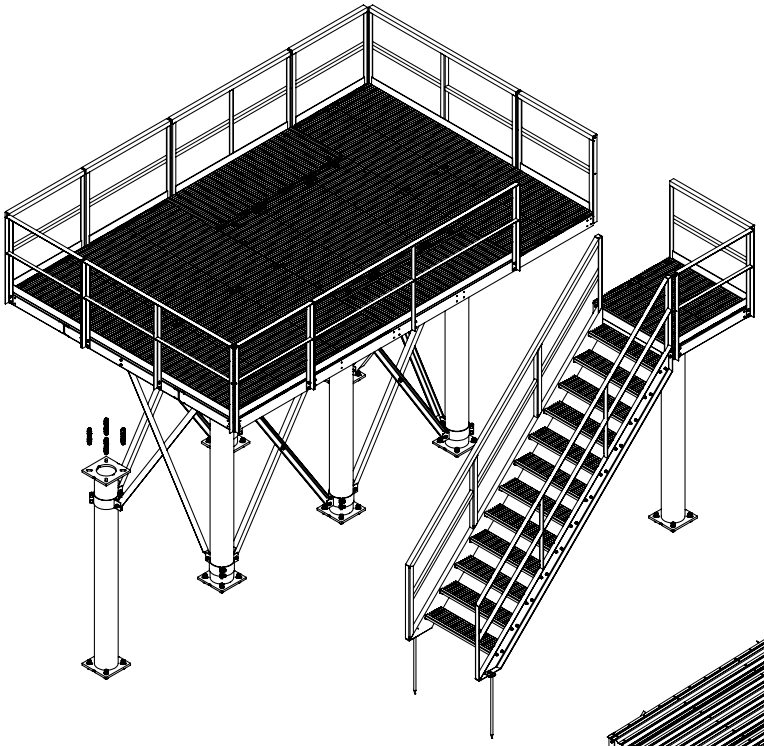

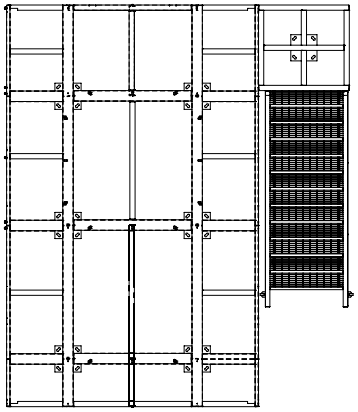

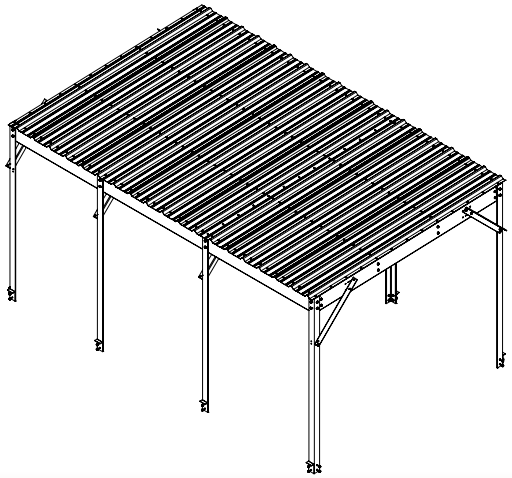

The 1000-0010-0557 platform is identical to the 1000-0010-0146 with the exception that the .... 0557 P/N does not include helical foundations.

EMI 1000-0010-0146-04 series platforms are approved for use with the included helical kit, provided that presumptive soil values listed in Annex F of TIA-222-H are met. It is the responsibility of the Owner to verify that site-specific soil conditions meet or exceed the mechanical properties referenced in Annex F. For platforms with elevations greater than 4’-0”, contact EMI for project-specific foundation design and verification.

166″ x 80″ WIC/Combo Gravity Mount Skid Platform

Part Number
AT&T- CEQ.53657 **EMI-** 1000-0010-0123
Click the **EMI** part number to download drawing.
Description
WIC-genset combo 166”x 80” gravity mount platform for 80”x80” WIC and genset. Includes 2-step, 3-step stair and gravity mount foundations

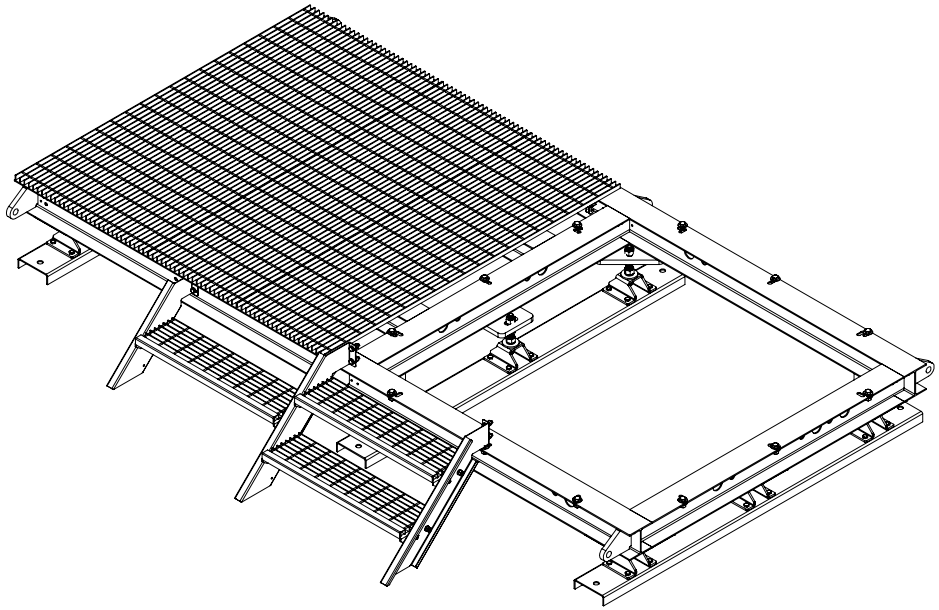

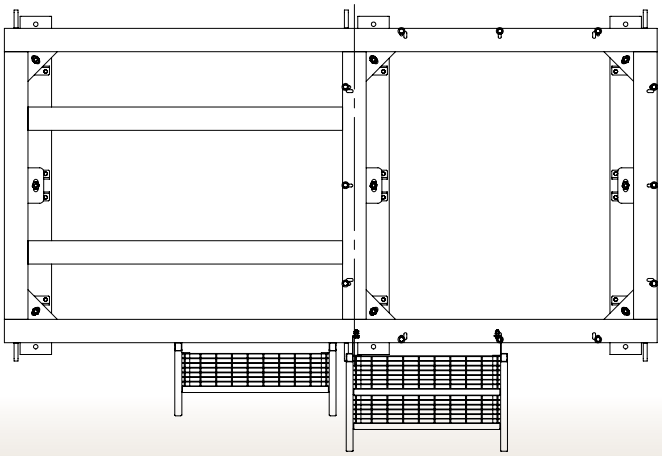

166″ x 80″ WIC/Combo Helical Mount Grade Platform

Part Number
AT&T- CEQ.53663 **EMI-** 1000-0010-0122
Click the **EMI** part number to download drawing.
Description
WIC-genset combo 166”x 80” helical mount platform and genset. Includes 1-step, 2-step entry stair and helical foundations.

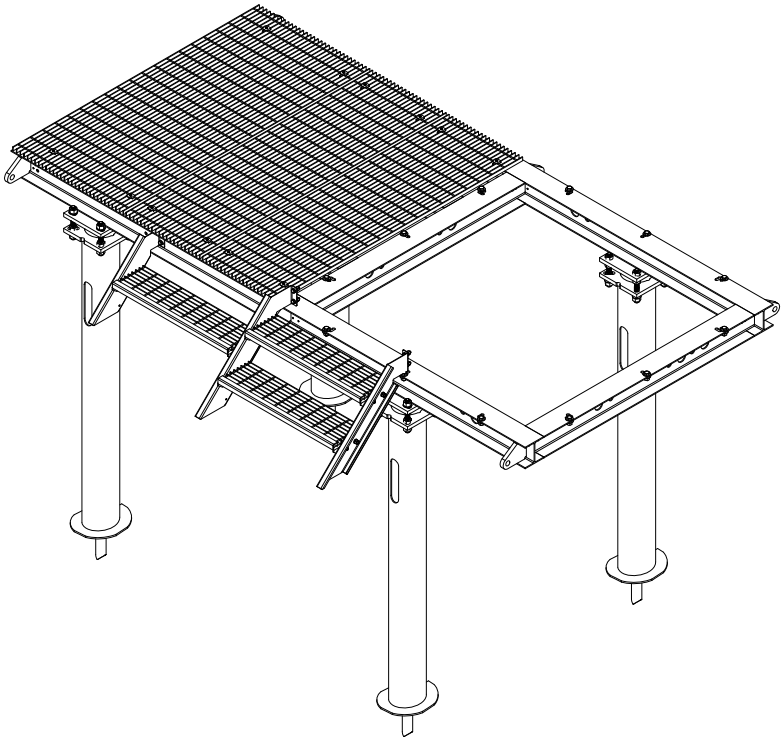

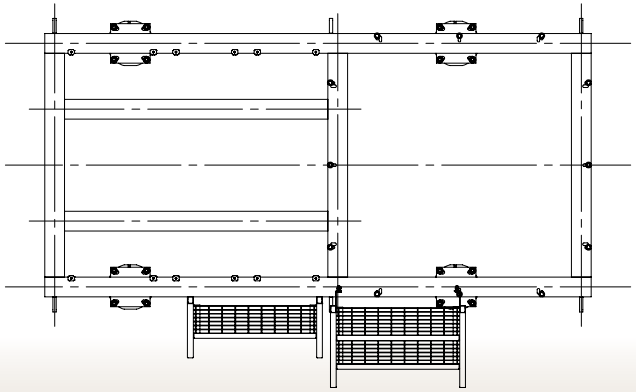

166″ x 80″ WIC/WICG Gravity Mount Skid Platform

Part Number
AT&T- CEQ.53662 **EMI-** 1000-0010-0179
Click the **EMI** part number to download drawing.
Description
WIC/WICG combo platform kit for 80”x 80” WIC and 20kW ID genset, includes (2) 2-step entry stairs and gravity mount foundations.

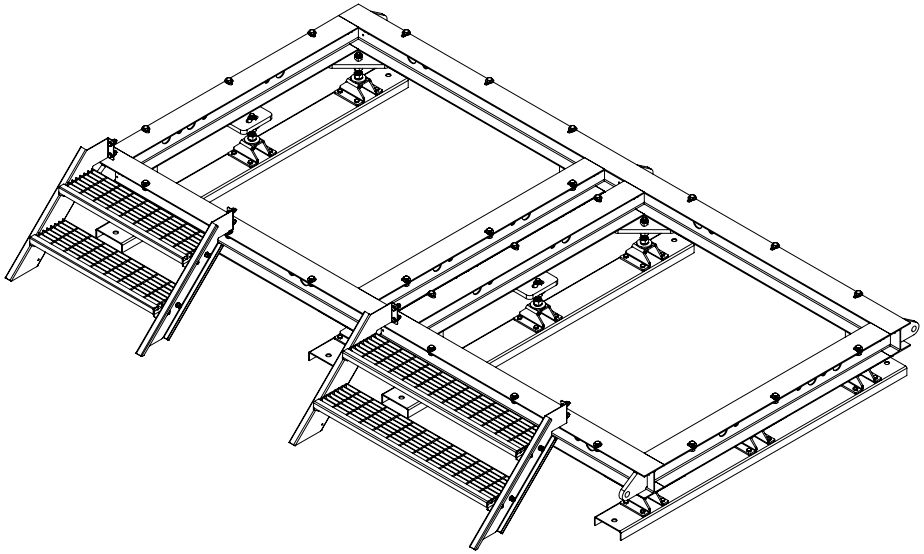

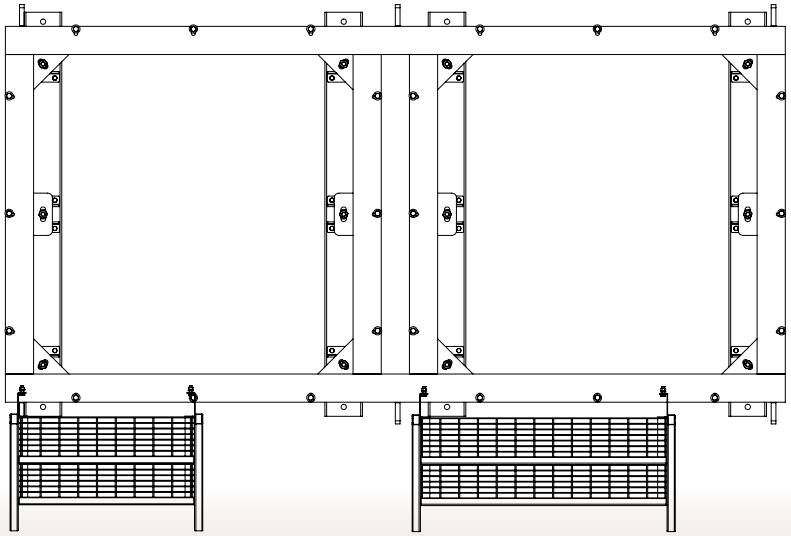

166″ x 80″ WIC/WICG Helical Mount Grade Platform

Part Number
AT&T- CEQ.53684 **EMI-** 1000-0010-0171 ⭳
⭳ Click the **EMI** part number to download drawing.
Description
WIC/WICG combo platform kit for 80”x 80” WIC and 20kW ID genset, includes (2) 2-step entry stairs and helical foundations.

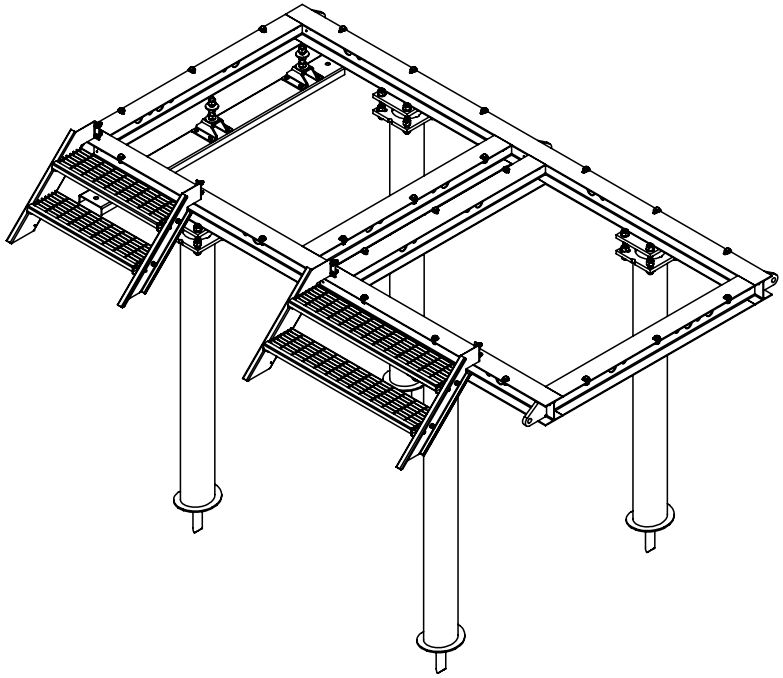

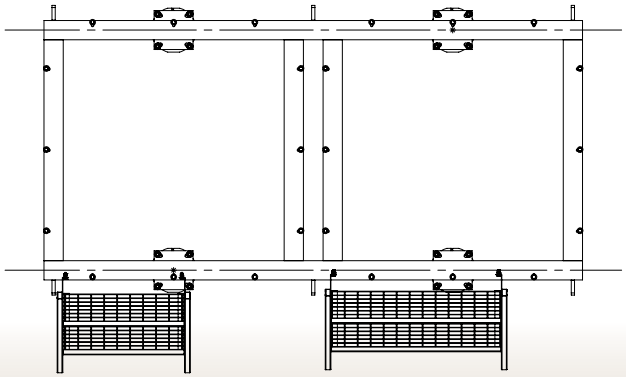

Platform Extension "Wing" Kit

Part Number
AT&T- CEQ.53681 EMI- 1000-0020-0032
Click the EMI part number to download drawing.
Description
OD cabinet platform 30kW generator extension with two 12" extension wings set.
For Use On The Following Platforms
EMI- 1000-0010-0122
EMI- 1000-0010-0123
EMI- 1000-0010-0102
EMI- 1000-0010-0128
EMI- 1000-0010-0131

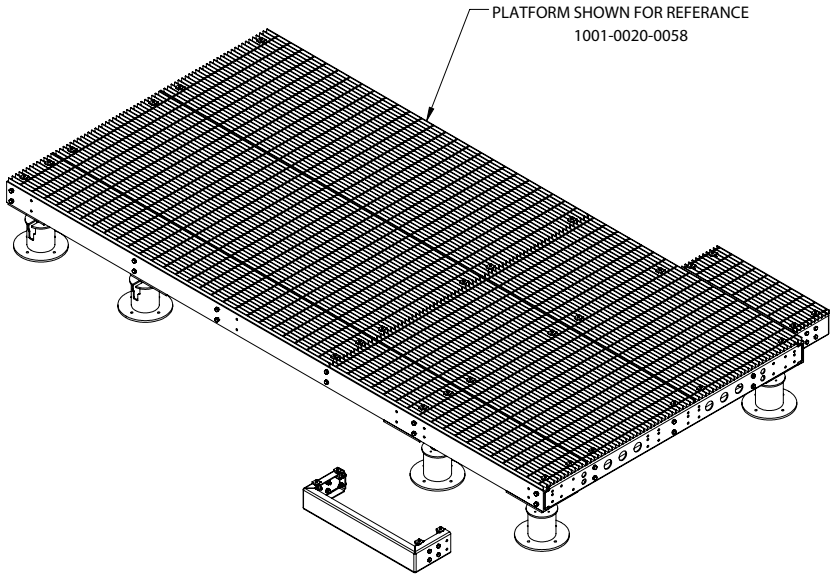

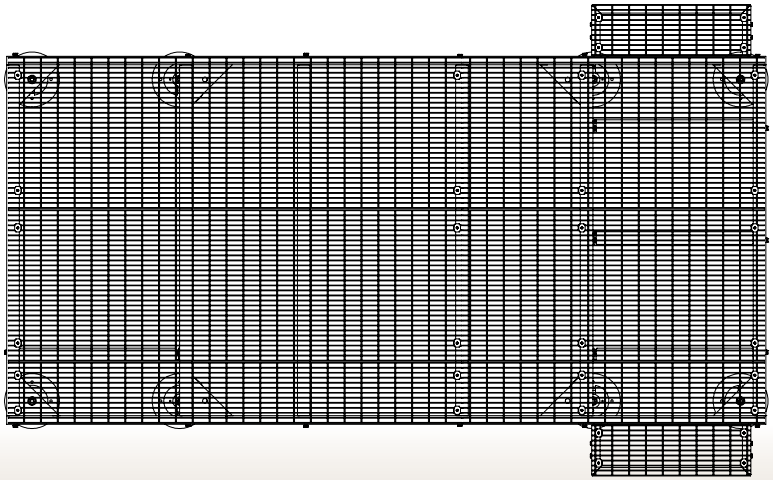

95" x 33" DELTA WUC - Helical Mount Skid

Part Number
AT&T- CEQ.54436 **EMI-** 1010-0010-0160
Click the **EMI** part number to download drawing.
Description
Delta WUC helical mount platform kit 95" x 33" and 4 Qty 6" x 7' helical foundations and leveling hardware.

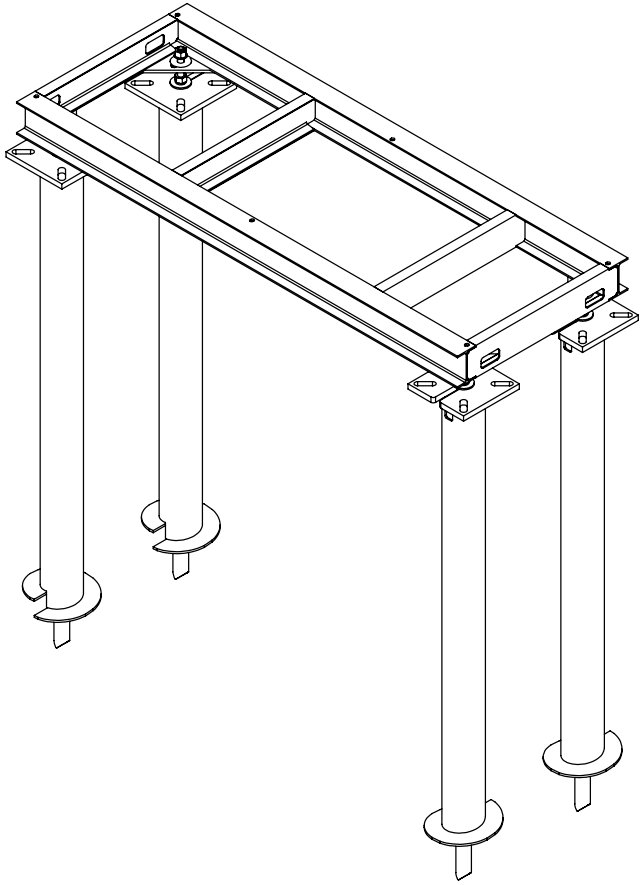

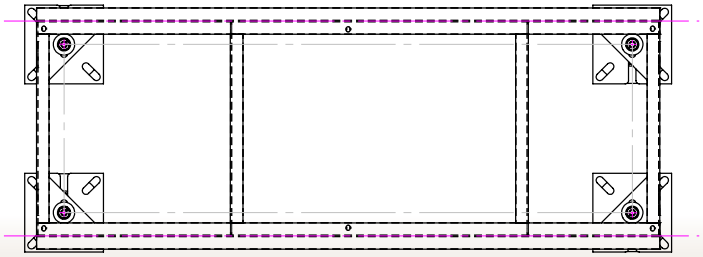

102″ x 75″ WUC Gravity/Pad Mount Platform & Optional Single Step Kit

Part Number
AT&T- CEQ.54437 **EMI-** 1010-0010-0118
Click the **EMI** part number to download drawing.
Description
WUC gravity mount platform assembly 102” x 75” with steel grating and leveling feet.

Single Step Kit Sold Seperately

Part Number
AT&T- CEQ.51644 **EMI-** 1003-0000-0020
Click the **EMI** part number to download drawing.
Description
WUC single step stair kit 45 degree including hardware.
Part Number
AT&T- CEQ.65872 **EMI-** 1001-0030-0106
Click the **EMI** part number to download drawing.
Description
120" x 96" Ice Bridge Canopy (expanded metal) †*concrete pad installation only*

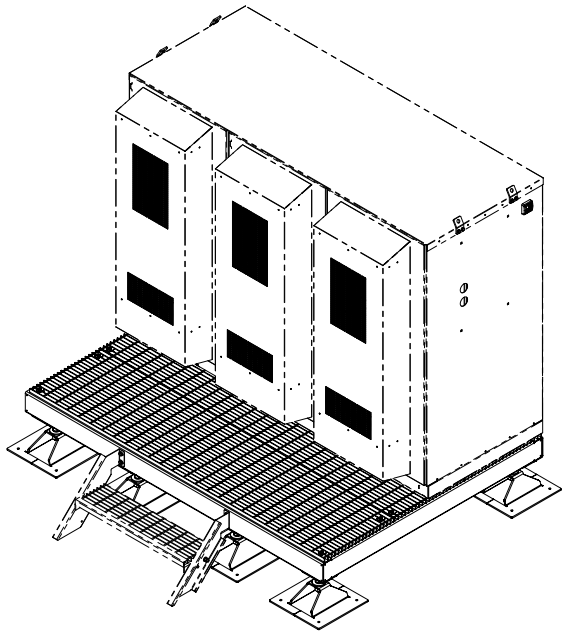

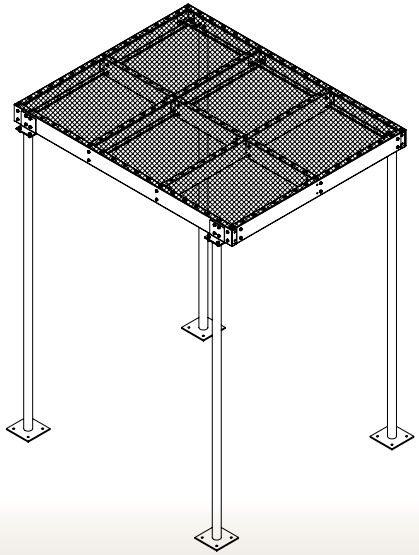

156" x 106" WUC - 3 Bay/Genset Gravity/Pad Mount Platform

Part Number
AT&T- CEQ.48196 **EMI-** 1010-0010-0171
Click the **EMI** part number to download drawing.
Description
3-Bay WUC/genset gravity mount platform kit 156" x 106" with 1" steel grating and 8 leveling feet grade level.

156" x 106" WUC - 3 Bay/Genset Helical Mount Platform

Part Number
AT&T- CEQ.65863 **EMI-** 1000-0010-0597
Click the **EMI** part number to download drawing.
Description
Generator up to 50 kW gravity mount platform kit 156" x 106" with 1" steel grating and 8 Qty 6" x l0' helical foundations and leveling hardware.

Single Step Kit Sold Seperately

Part Number
AT&T- CEQ.51644 **EMI-** 1003-0000-0020
Click the **EMI** part number to download drawing.
Description
Single step stair kit 45 degree including hardware.
Part Number
AT&T- CEQ.65876 **EMI-** 1001-0030-0107
Click the **EMI** part number to download drawing.
Description
150" x 106" Ice Bridge Canopy (expanded metal)

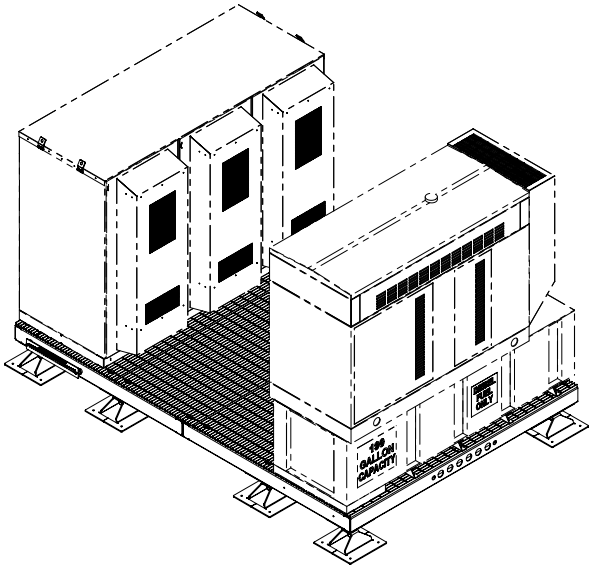

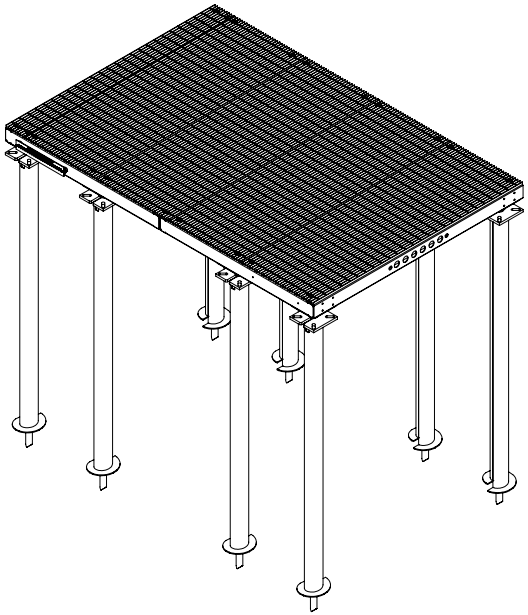

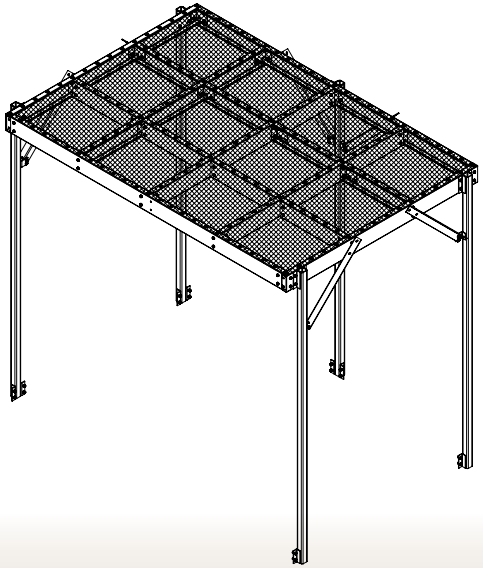

180" x 87 ¼" WUC/Combo Platform with Canopy & Optional Wing Kit for 30kW Genset

Part Number		Elevation
AT&T- CEQ.53654	EMI- 1000-0010-0102-FC	Ground
AT&T- CEQ.53679	EMI- 1000-0010-0102-SC	Ground

Click the **EMI** part number to download drawing.

Description

OD cabinet equipment platform w/canopy 180" x 87 ¼". Includes stair kit, lighting, and unistruts.

Special Notes

FC - Factory Configured - pre-assembled unit
SC - Site Configured - on-site assembly

Part Number

AT&T- CEQ.53681 EMI- 1000-0020-0032

Description

OD cabinet platform 30kW generator extension with two 12" extension wings set.

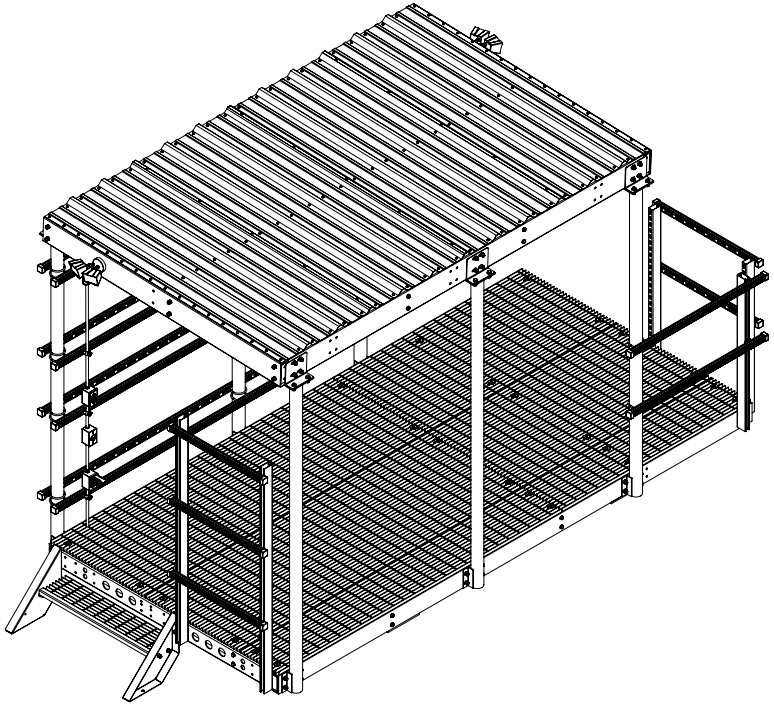

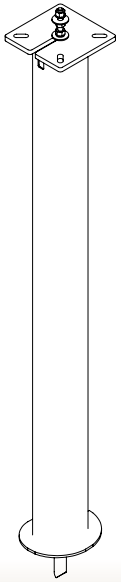

Helical and Concrete Foundations Sold Seperately

Part Number

AT&T- CEQ.53658 EMI- 1008-0050-0011

Description

10" dia. x 10' high helical foundation (4 unit kit), single stud leveling.

Part Number

AT&T- CEQ.53682 EMI- 1008-0030-0005

Description

6" dia. x 8' high concrete mount extension with single stud leveling hardware. (4 unit Kit)

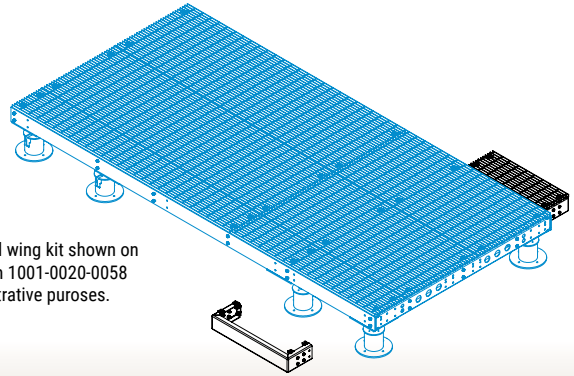

Optional wing kit shown on platform 1001-0020-0058 for illustrative puroses.

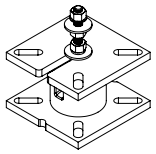

180" x 87 ¼" WUC/Combo Platform without Canopy & Optional Wing Kit for 30kW Genset

Part Number
AT&T- CEQ.53675 **EMI-** 1000-0010-0128-FC
Click the **EMI** part number to download drawing.
Description
OD cabinet gravity platform without canopy 180" x 87 ¼". Includes 1-step entry stair, gravity mount feet and unistrut kit, factory assembled.
Special Notes
FC - Factory Configured - pre-assembled unit SC - Site Configured - on-site assembly
Part Number
AT&T- CEQ.53681 **EMI-** 1000-0020-0032
Click the **EMI** part number to download drawing.
Description
OD cabinet platform 30kW generator extension with two 12" extension wings set.

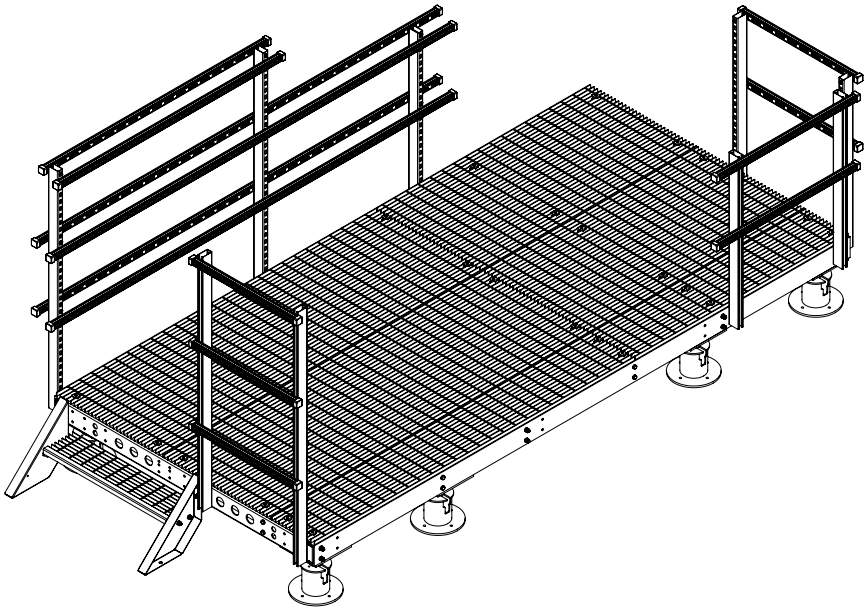

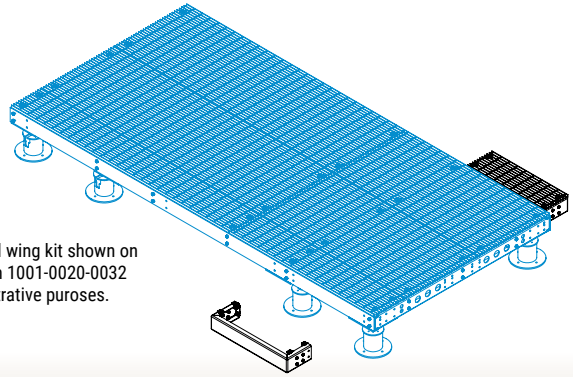

Optional wing kit shown on platform 1001-0020-0032 for illustrative puroses.

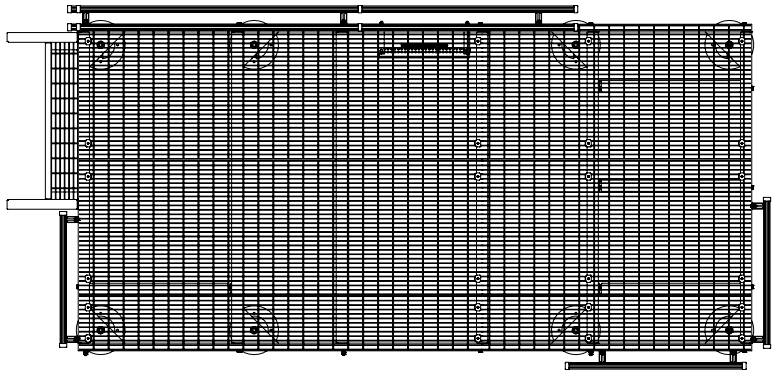

180" x 87 1/4" WUC/Combo Platform with Mesh Canopy & Optional Wing Kit for 30kW Genset

Part Number	
AT&T- CEQ.53661	EMI- 1000-0010-0131-FC
AT&T- CEQ.53673	EMI- 1000-0010-0131-SC

Click the **EMI** part number to download drawing.

Description

OD cabinet gravity platform 180" x 87 1/4" with expanded metal canopy (not solid). Includes 1-step entry stair, gravity mount feet and unistrut kit.

Special Notes

FC - Factory Configured - pre-assembled unit
SC - Site Configured - on-site assembly

Part Number	
AT&T- CEQ.53681	EMI- 1000-0020-0032

Click the **EMI** part number to download drawing.

Description

OD cabinet platform 30kW generator extension with two 12" extension wings set.

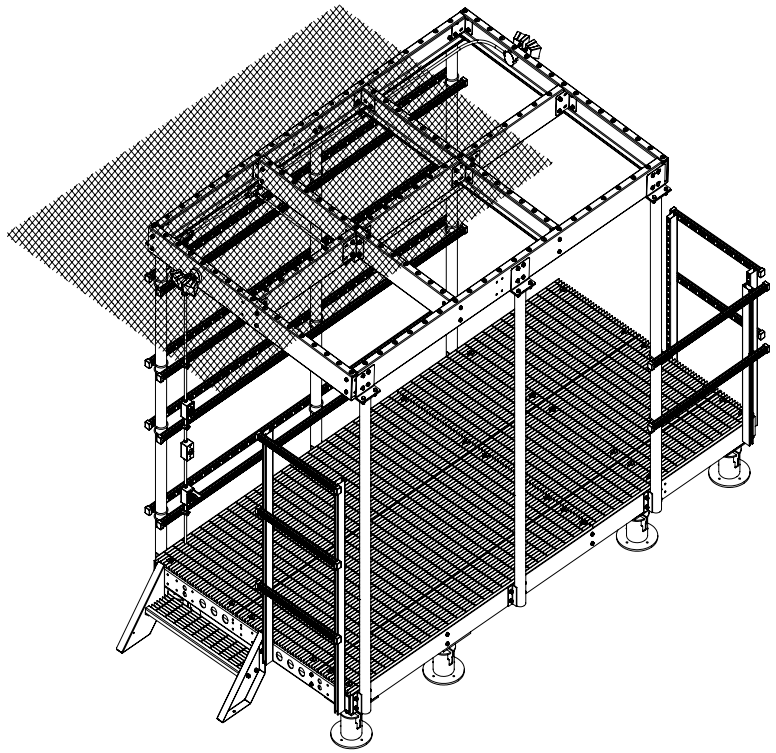

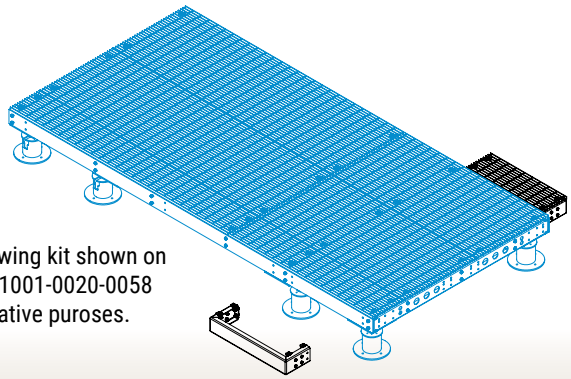

Optional wing kit shown on platform 1001-0020-0058 for illustrative puroses.

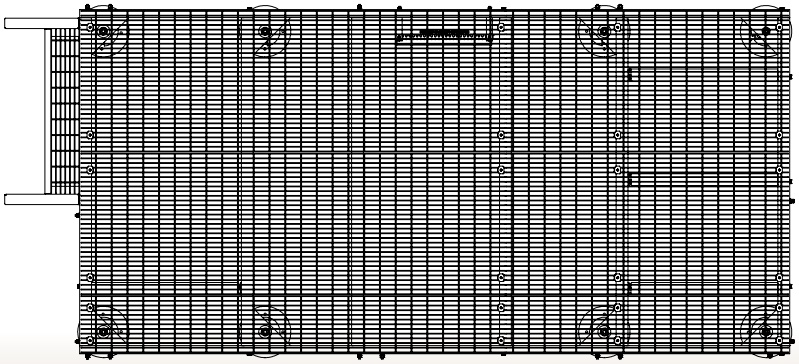

192" x 120" Generator up to 50 kW Elevated Platform with Stairs

AT&T- CEQ.65649	EMI- 1000-0010-0567-04	4 ft
AT&T- CEQ.65663	EMI- 1000-0010-0567-06	6 ft
AT&T- CEQ.65652	EMI- 1000-0010-0567-08	8 ft
AT&T- CEQ.65657	EMI- 1000-0010-0567-10	10 ft
AT&T- CEQ.65658	EMI- 1000-0010-0567-12	12 ft
AT&T- CEQ.65651	EMI- 1000-0010-0567-14	14 ft
AT&T- CEQ.65659	EMI- 1000-0010-0567-16	16 ft
AT&T- CEQ.65665	EMI- 1000-0010-0567-18	18 ft
AT&T- CEQ.65654	EMI- 1000-0010-0567-20	20 ft

Click the **EMI** part number to download drawing.

Generator up to 50 kW elevated platform kit, 192"x 120" up to 50KW Genset. Includes stairs and landings. Helical foundations not included.

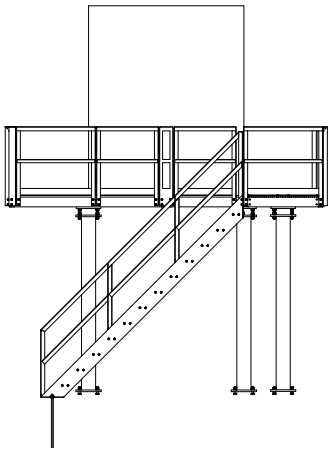

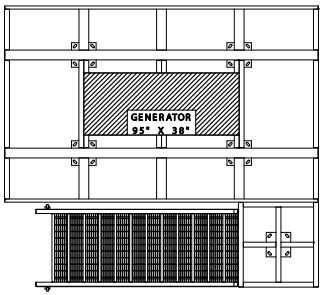

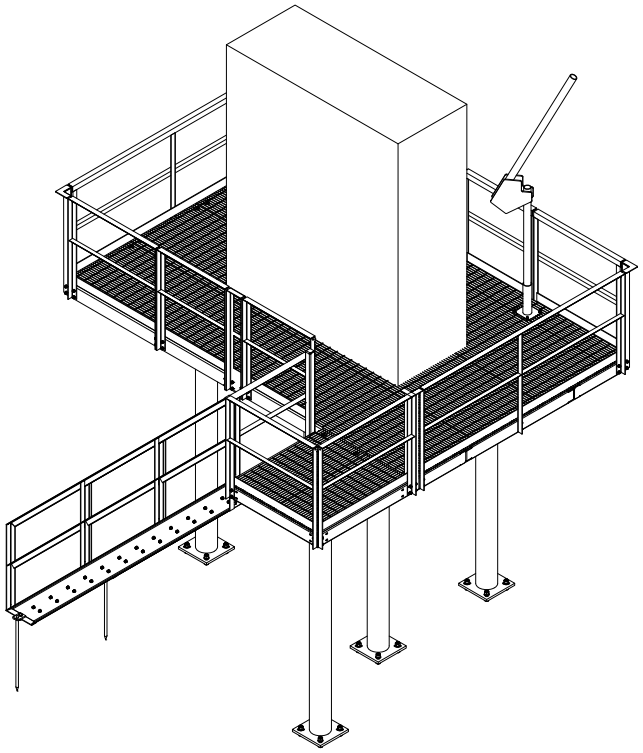

Options

Crane

AT&T- CEQ.65650 EMI- 1000-0030-0251

Thern 500 lb. Ensign Series Davit crane, model 5PA5-M1 powder coated crane with hand winch (M4022PB-K) and 5bp5 pedestal base (powder coated)

5X Helical Kit

AT&T- CEQ.65667 EMI- 1000-0030-0253

Quantity of 5, 10" x 21' Triple Flight Helical Anchor Kit *(below 14')*

6X Helical Kit

AT&T- CEQ.66043 EMI- 1000-0030-0263

Quantity of 6, 10" x 21' Triple Flight Helical Anchor Kit *(14' and above)*

Ice Bridge Canopy

AT&T- CEQ.65862 EMI- 1001-0030-0105

192 x 120' Ice Bridge Canopy (expanded metal)

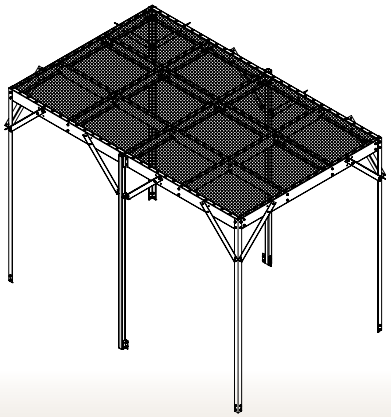

192" x 120" Generator up to 50 kW Elevated Platform w/ Ladder [Non-Standard Option] *Order only for real-estate constraint sites*

AT&T- CEQ.65656	EMI- 1000-0010-0571-04	4 ft
AT&T- CEQ.65661	EMI- 1000-0010-0571-06	6 ft
AT&T- CEQ.65653	EMI- 1000-0010-0571-08	8 ft*
AT&T- CEQ.65660	EMI- 1000-0010-0571-10	10 ft*
AT&T- CEQ.65662	EMI- 1000-0010-0571-12	12 ft*
AT&T- CEQ.65655	EMI- 1000-0010-0571-14	14 ft*
AT&T- CEQ.65648	EMI- 1000-0010-0571-16	16 ft*
AT&T- CEQ.65647	EMI- 1000-0010-0571-18	18 ft*
AT&T- CEQ.65664	EMI- 1000-0010-0571-20	20 ft*

Click the **EMI** part number to download drawing.

Generator up to 50 kW elevated platform kit, 192"x 120" up to 50KW Genset. Includes entry ladder (and safety climb arrest above 6 ft elevation). Helical foundations not included.
**Includes safety climb system.*

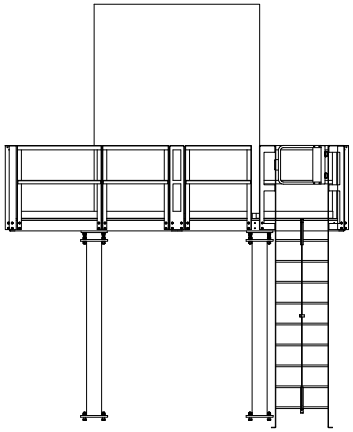

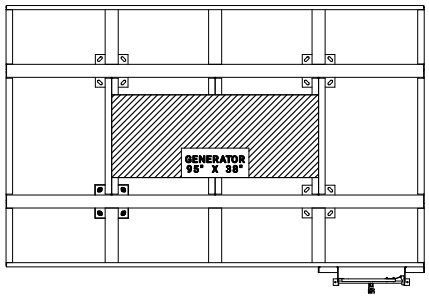

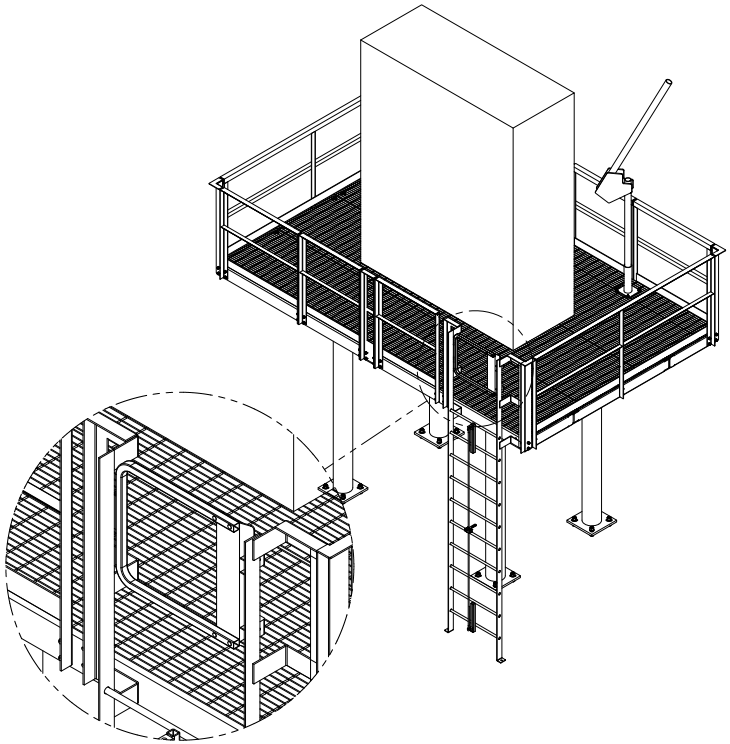

Options

Crane

AT&T- CEQ.65650 EMI- 1000-0030-0251

Thern 500 lb. Ensign Series Davit crane, model 5PA5-M1 powder coated crane with hand winch (M4022PB-K) and 5bp5 pedestal base (powder coated)

4X Helical Kit

AT&T- CEQ.65668 EMI- 1000-0030-0252

Quantity of 4, 10" x 21' Triple Flight Helical Anchor Kit

Ice Bridge Canopy

AT&T- CEQ.65862 EMI- 1001-0030-0105

192 x 120' Ice Bridge Canopy (expanded metal)

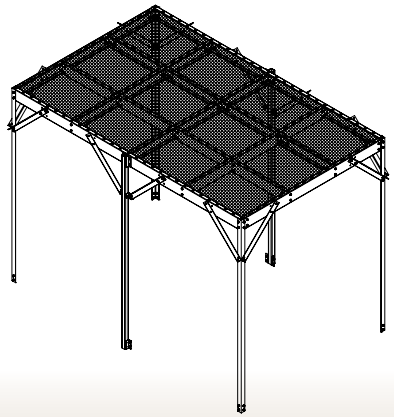

156" x 106" 50 kW Genset 3' elevated Gravity/Pad Mount Platform

Part Number
AT&T- CEQ.65867 **EMI-** 1000-0010-0596 ⭳
⭳ Click the **EMI** part number to download drawing.
Description
Generator up to 50 kW gravity mount platform kit 156" x 106" with 1" steel grating, 8 - 26" elevated leveling feet, and safety railing.

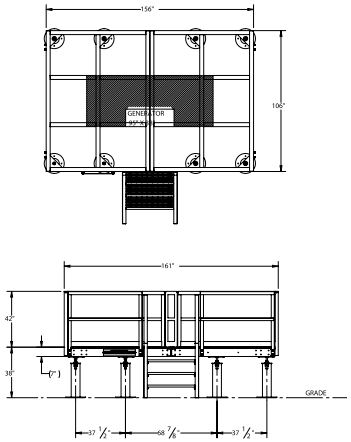

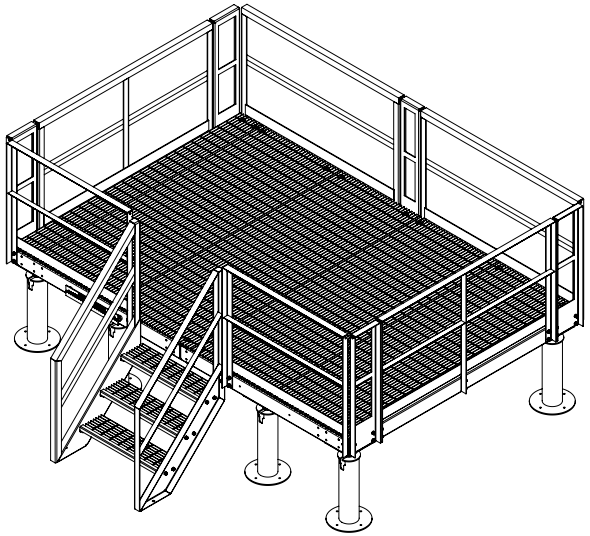

Part Number
AT&T- CEQ.65876 **EMI-** 1001-0030-0107 ⭳
⭳ Click the **EMI** part number to download drawing.
Description
150" x 106" Ice Bridge Canopy (expanded metal)

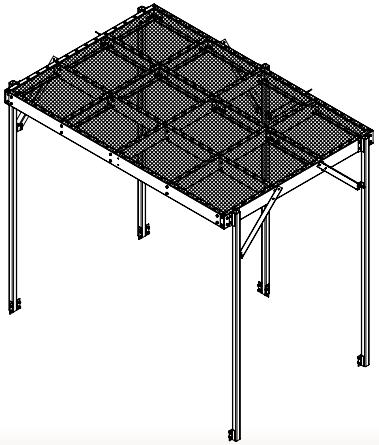

9′ x 4′ Pad Mount Generator Platform

This 9′ x 4′ platform is designed for all AT&T approved generators up to the Generac 30kW diesel. The generator should be installed in the center of the platform or in any orientation the will fit. Grounding locations are on all four sides to support any site layout. Platform includes a rodent guard for all generators that need it.

Part Number	
AT&T- CEQ.53672	EMI- 1001-0020-0062
Click the EMI part number to download drawing.	
Description	
Gravity mount generator platform with adjustable feet.	

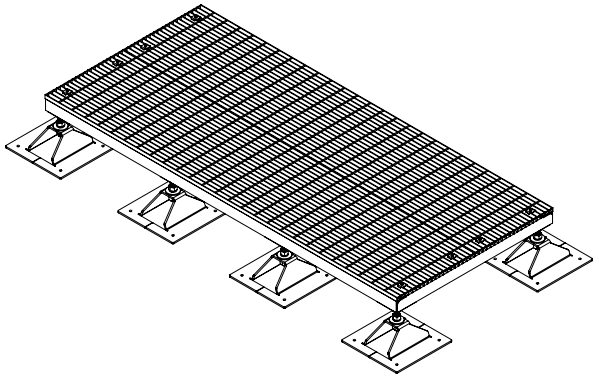

10′ x 4′ Pad Mount Generator Platform

This 10′ x 4′ platform is designed for all AT&T approved generators up to 50kW. The generator should be installed in the center of the platform or in any orientation the will fit. Grounding locations are on all four sides to support any site layout. Platform includes a rodent guard for all generators that need it.

Part Number	
AT&T- CEQ.65865	EMI- 1001-0000-0073
Description	
Gravity mount generator platform with adjustable feet.	

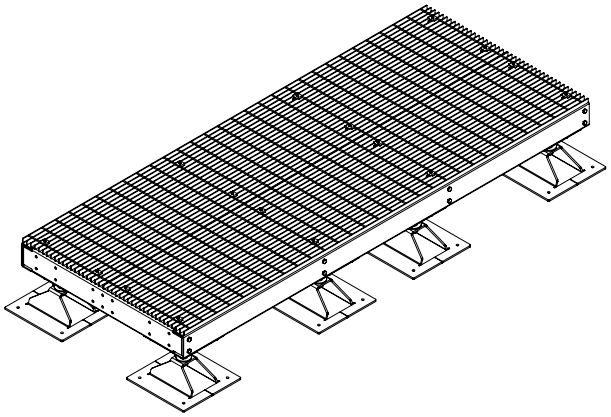

Part Number	
AT&T- CEQ.65872	EMI- 1001-0030-0106
Description	
120" x 96" Ice Bridge Canopy (expanded metal)	
Part Number	
AT&T- CEQ.65869	EMI- 1000-0030-0254
Description	
Quantity of 4, 4" x 7' Helical foundation Kit for canopy only	
Part Number	
AT&T- CEQ.65871	EMI- 1000-0000-0276
Description	
Kit containing 0106 Canopy and 0254 helicals	

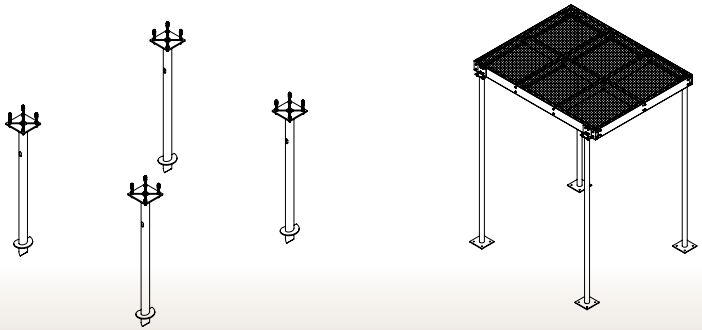

8′ x 4′ Pad Mount Generator Platform

This 8′ x 4′ platform is designed for all AT&T approved natural gas and propane generators up to the 50kW. The generator should be installed in the center of the platform or in any orientation the will fit. Grounding locations are on all four sides to support any site layout. Platform includes a rodent guard for all generators that need it.

Part Number
AT&T- CEQ.67224 **EMI-** 1000-0010-0628
Click the **EMI** part number to download drawing.
Description
Gravity mount generator platform with adjustable feet.

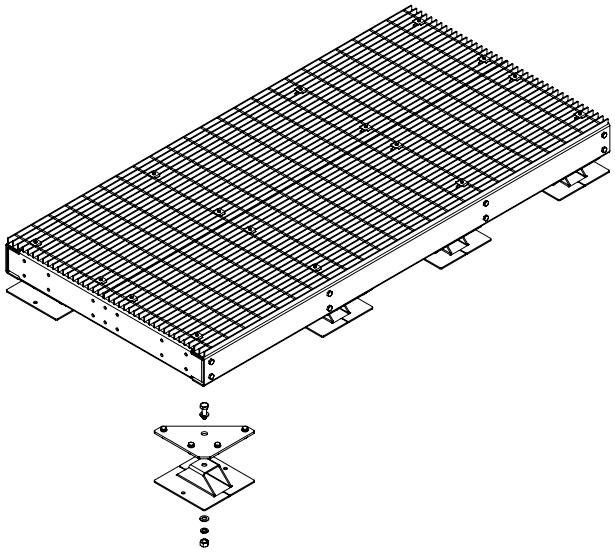

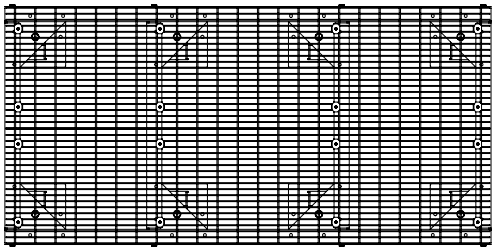

Part Number
AT&T- CEQ.65872 **EMI-** 1001-0030-0106
Description
120" x 96" Ice Bridge Canopy (expanded metal)
Part Number
AT&T- CEQ.65869 **EMI-** 1000-0030-0254
Description
Quantity of 4, 4” x 7’ Helical foundation Kit for canopy only
Part Number
AT&T- CEQ.65871 **EMI-** 1000-0000-0276
Description
Kit containing 0106 Canopy and 0254 helicals

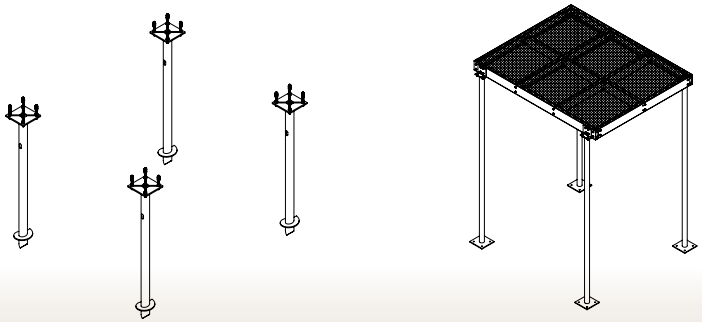

72″ x 53″ Helical Mount Generator Platform

One of these platforms will accommodate all generators up to 20kW. Grounding locations are on all sides to support any site layout. Platform includes a rodent guard for generators that need it.

Part Number
AT&T- CEQ.53665 **EMI-** 1000-0010-0109
Click the **EMI** part number to download drawing.
Description
Generator platform kit 72” x 53” with 6” dia. x 7’ high helical foundations and leveling hardware.

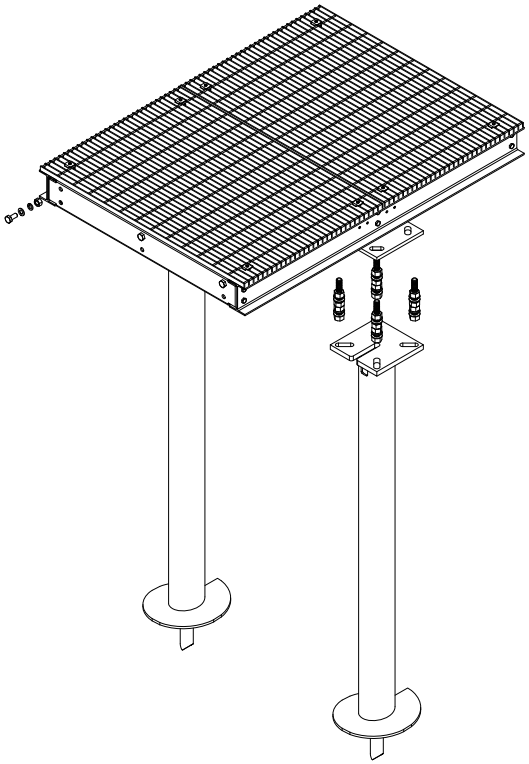

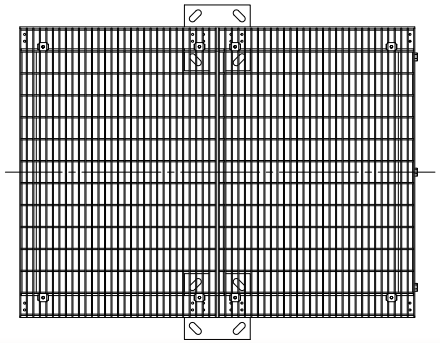

144″ x 53″ Helical Mount Generator Platform

Two of these platforms bolted together will accommodate generators up to 30kW. Grounding locations are on three sides to support any site layout. Platform includes rodent guard for generators that need it. All hardware provided.

Part Number
AT&T- CEQ.53665 X2 **EMI-** 1000-0010-0109 X2 ⭳
⭳ Click the **EMI** part number to download drawing.
Description
Generator platform kit 144” x 53” with 6” dia. x 7’ high helical foundations and leveling hardware.

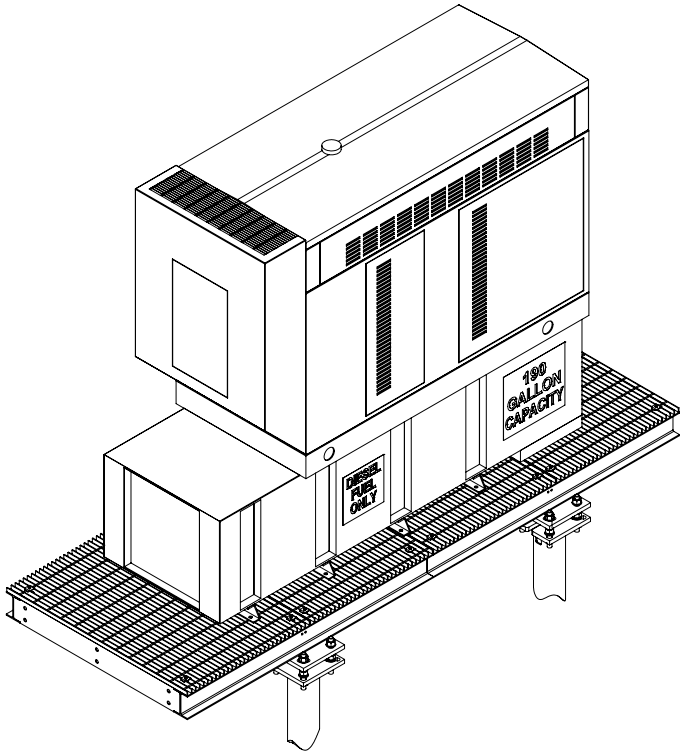

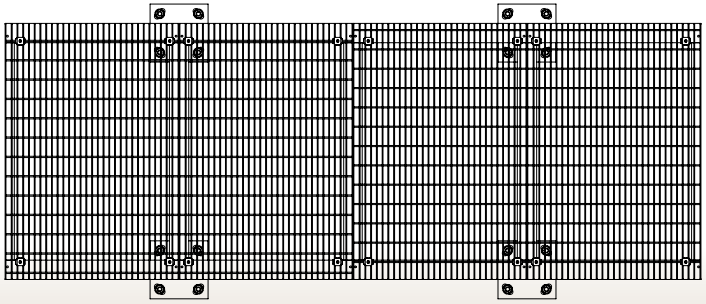

53″ x 36″ Vertical Generator Pad Mount Plinth

Part Number
AT&T- CEQ.53678 **EMI-** 1000-0000-0115
Click the **EMI** part number to download drawing.
Description
Vertical generator plinth for concrete mount 53” x 36” with anchor base plates and leveling hardware.

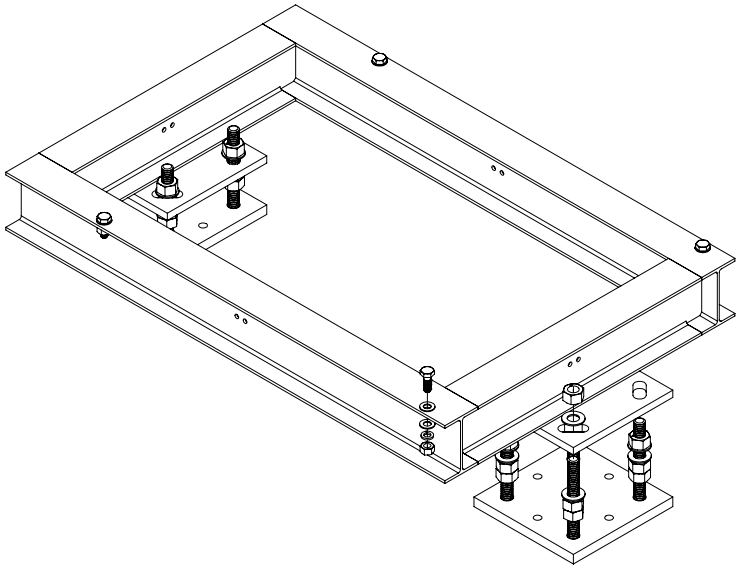

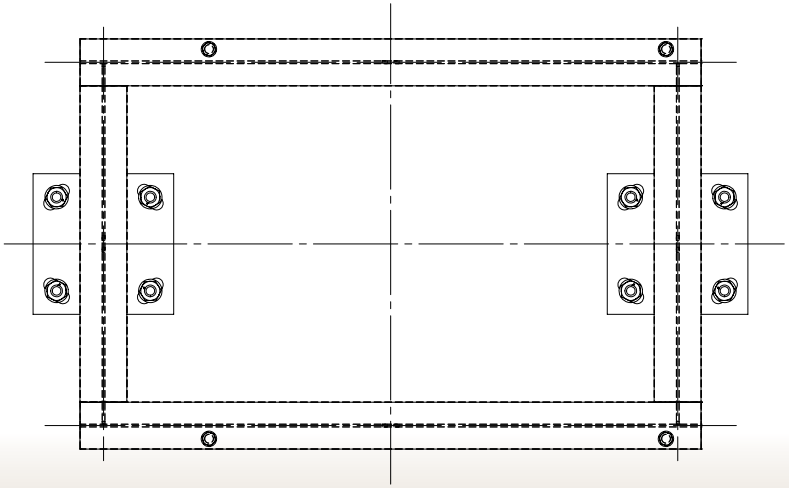

228" x 43 3/8" Generator Plinth Kit

Part Number

AT&T- NEQ.20738 **EMI-** W-000-954

Click the **EMI** part number to download drawing.

Description

Generator rail plinth kit 228" x 43 3/8" platform. Includes genset clamp kit, grating and ground bar kit.

Part Number

AT&T- CEQ.54367 **EMI-** 1000-0020-0034

Click the **EMI** part number to download drawing.

Description

6" dia. x 7' high helical foundation (4 unit kit) with quad mount leveling hardware.

Part Number

AT&T- CEQ.67217 **EMI-** 1000-0010-0593

Click the **EMI** part number to download drawing.

Description

Optional elevation adjustable walkway with stair. 18"-30" height range.

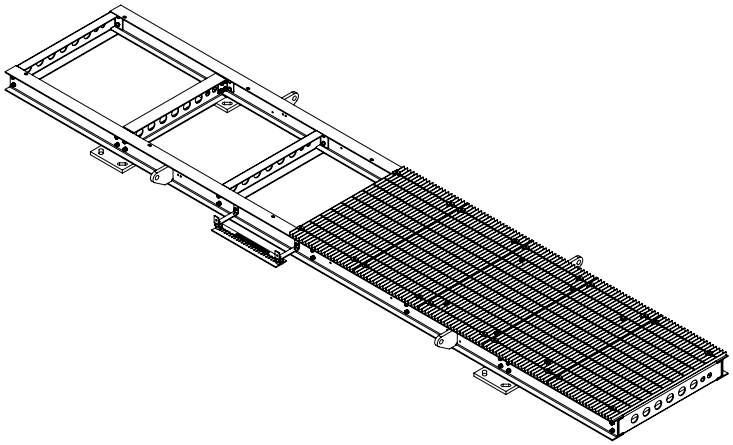

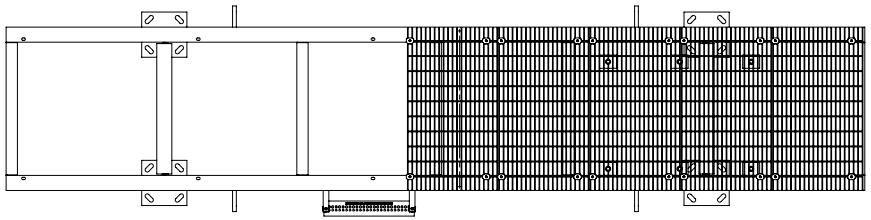

Install platform at grade level when helical foundations are used.

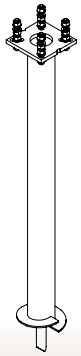

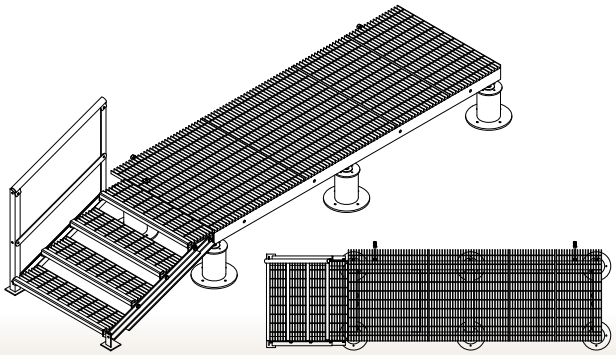

6″ Diameter x 7' Quad Mount Helical Foundation Kit

Part Number
AT&T- CEQ.54367 **EMI-** 1000-0020-0034
Click the **EMI** part number to download drawing.
Description
6” dia. x 7’ high helical foundation (4 unit kit) with quad mount leveling hardware.

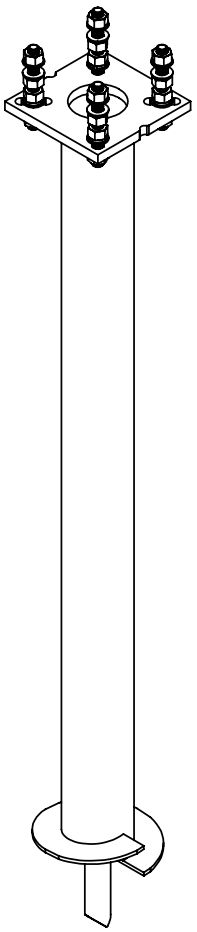

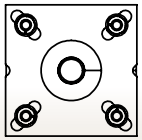

10″ Diameter 10' Single Stud Helical Foundation Kit

Part Number
AT&T- CEQ.53658 **EMI-** 1008-0050-0011 ⭳
⭳ Click the **EMI** part number to download drawing.
Description
10” dia. x 10’ high helical foundation (4 unit kit), single stud leveling.

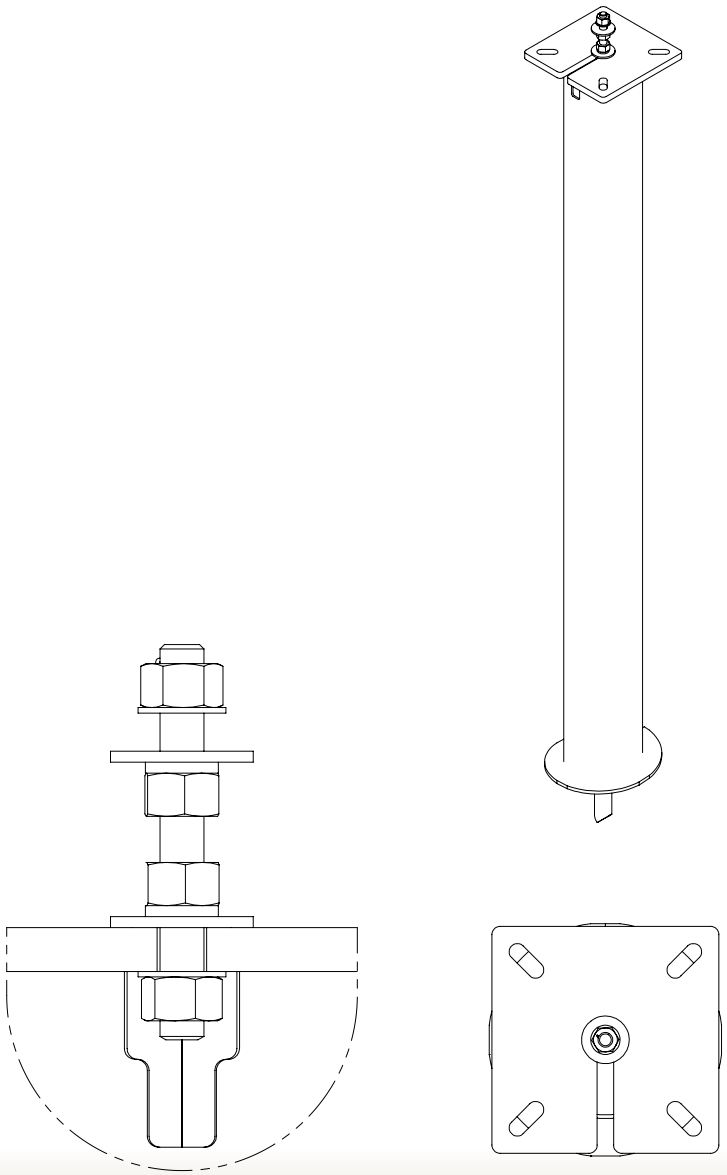

10″ Diameter 21' Triple Flight Helical Foundation Kit

Part Number
AT&T- CEQ.59815 **EMI-** 1000-0030-0243
Click the **EMI** part number to download drawing.
Description
10” dia. x 11’ high helical foundation with 10' extension (7 unit kit), quad mount leveling.

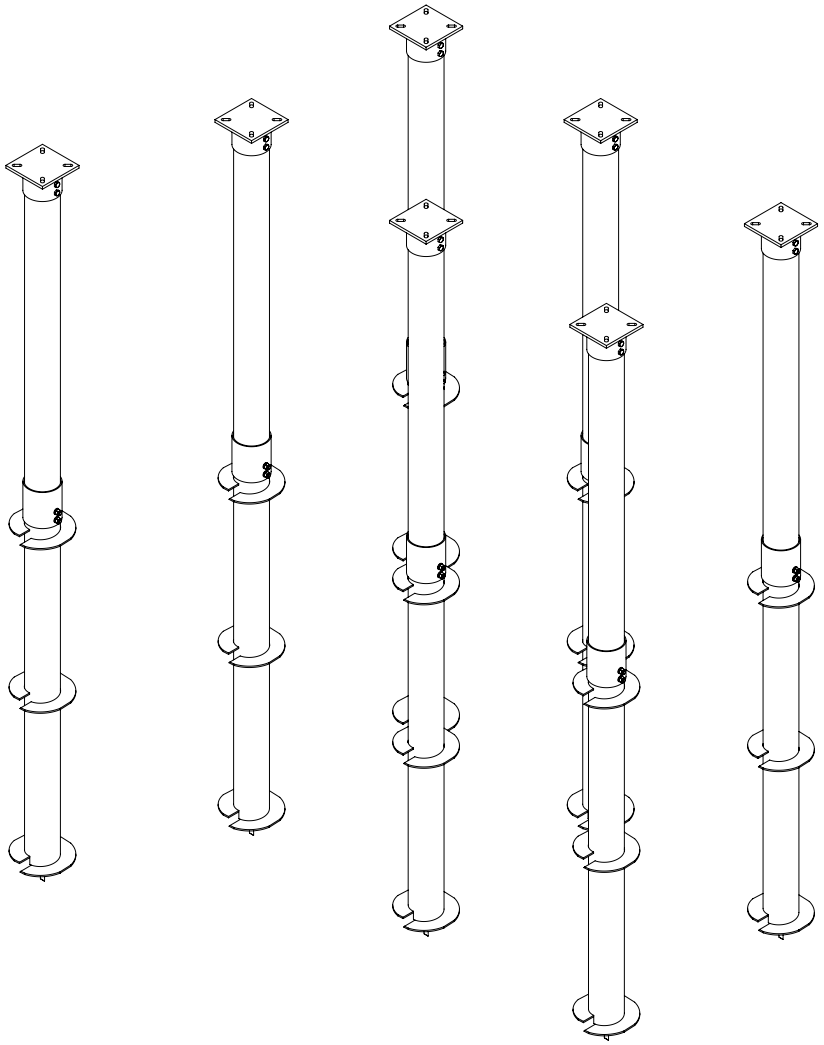

6″ Diameter Pad Mount Extension Single Stud Mount [4 Pk]

Part Number
AT&T- CEQ.53682 **EMI-** 1008-0030-0005 ⭳
⭳ Click the **EMI** part number to download drawing.
Description
6” dia. x 8” high concrete pad mount extension (4 unit kit), with single stud mount leveling hardware.

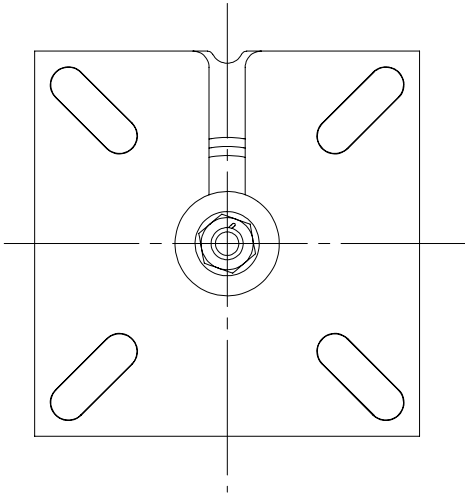

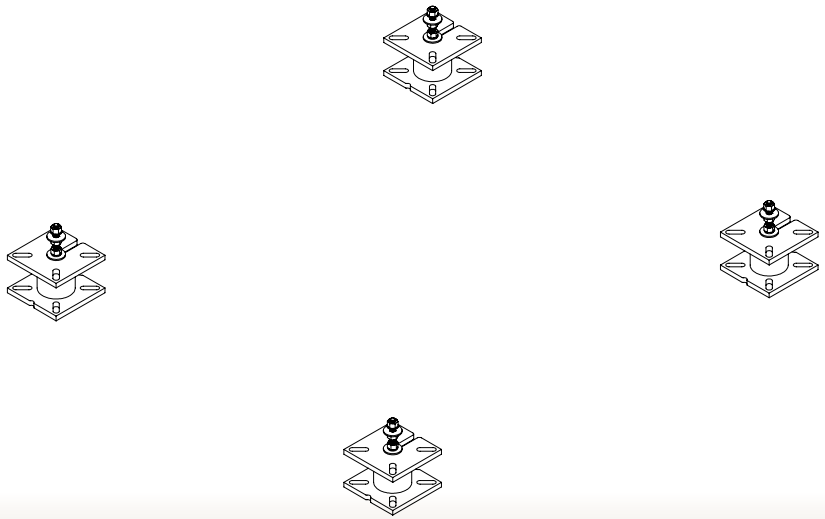

10" Diameter Foundation Extensions

Part Number		Elevation
AT&T- CEQ.57167	EMI- 1007-T010-0600	5 ft
AT&T- CEQ.57164	EMI- 1007-T010-1200	10 ft

Click the **EMI** part number to download drawing.

Description

5 & 10 ft. extensions for outdoor elevated WIC-WUC

Special Notes

The linked table drawing 1007-T010-0000 contains all extension part numbers by elevation.

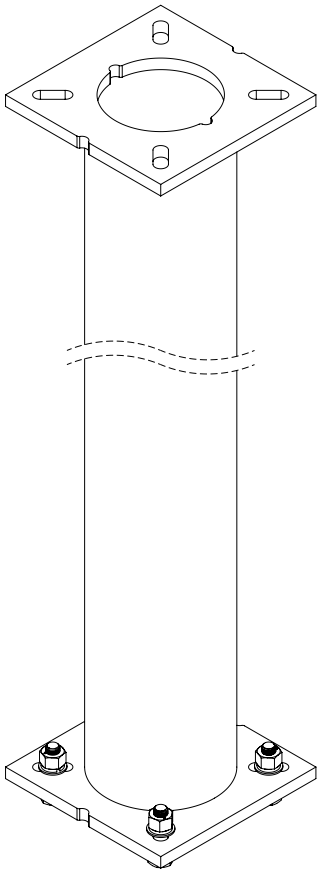

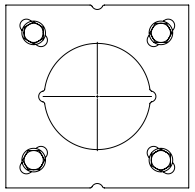

Single Step Stair Kit

Part Number
AT&T- CEQ.51644 **EMI-** 1003-0000-0020 ⭳ ⭳ Click the **EMI** part number to download drawing.
Description
WUC single step stair kit 45 degree including hardware.

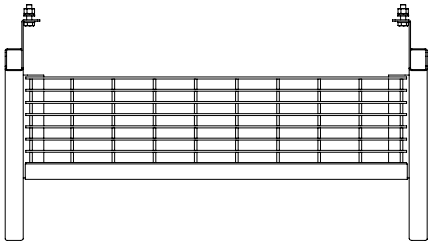

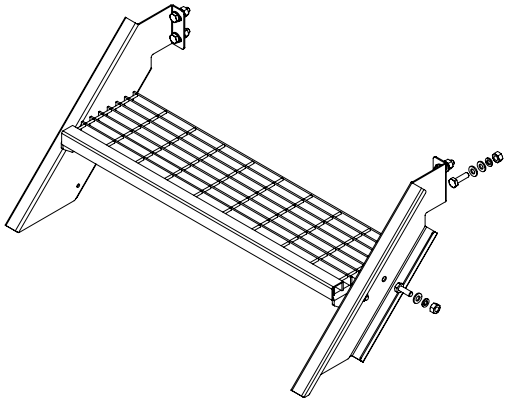

WIC & Genset Platform Fully Grated Conversion Kit

Part Number
AT&T- CEQ.53677 **EMI-** 1000-0010-0160 ⭳ ⭳ Click the **EMI** part number to download drawing.
Description
Conversion kit to modify 80” x 80” genset platform to fully grated for WUC or cabinet installation.

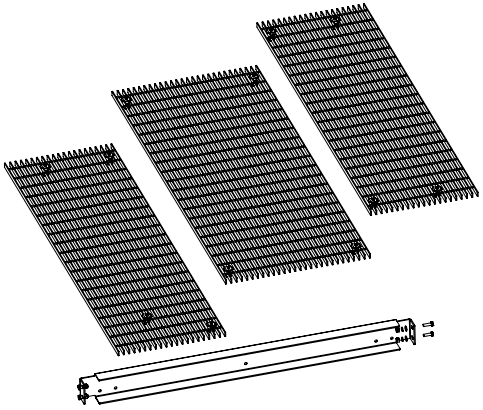

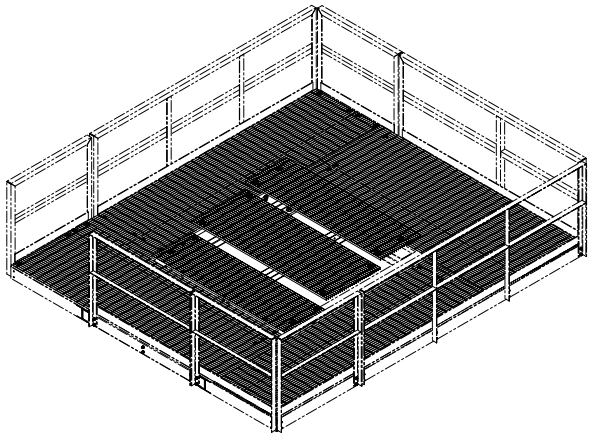

Canopy for WIC-WUC Outdoor Platform - 0146 & 0557

Part Number
AT&T- CEQ.57485 **EMI-** 1001-0030-0036
Click the **EMI** part number to download drawing.
Description
184” x 117” bolt together canopy for WIC and WUC outdoor platform series 1000-0010-0146.

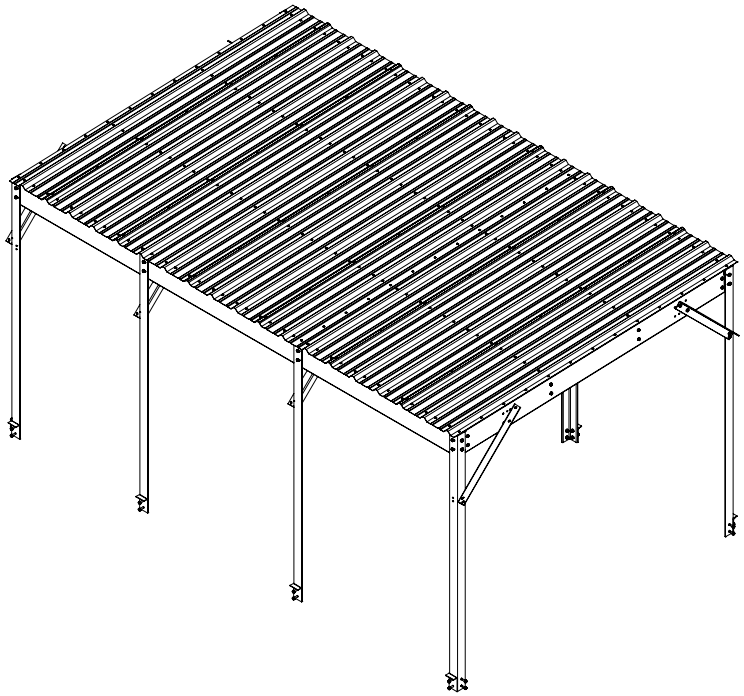

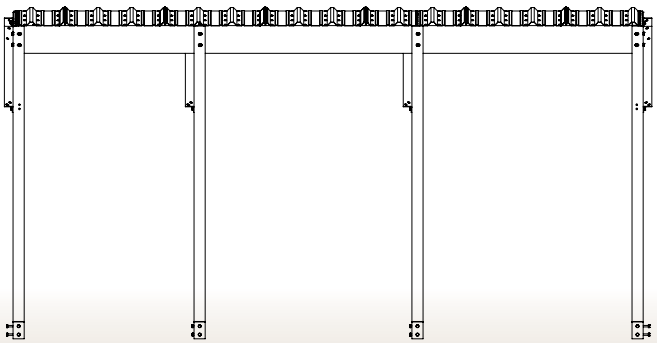

114" X 144" Pad Mount Canopy

Part Number
AT&T- CEQ.59292 **EMI-** 1001-0030-0075 ⭳ ⭳ Click the **EMI** part number to download drawing.
Description
114" x 144" Concrete mounted canopy kit.

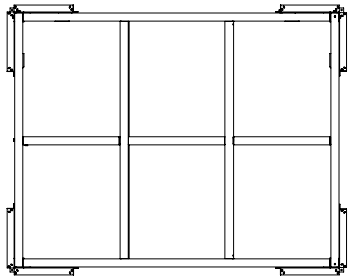

FRAME ONLY

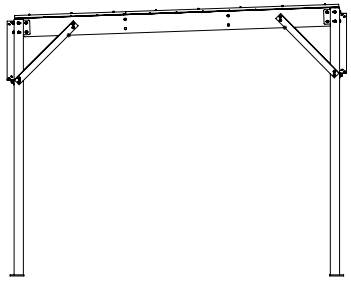

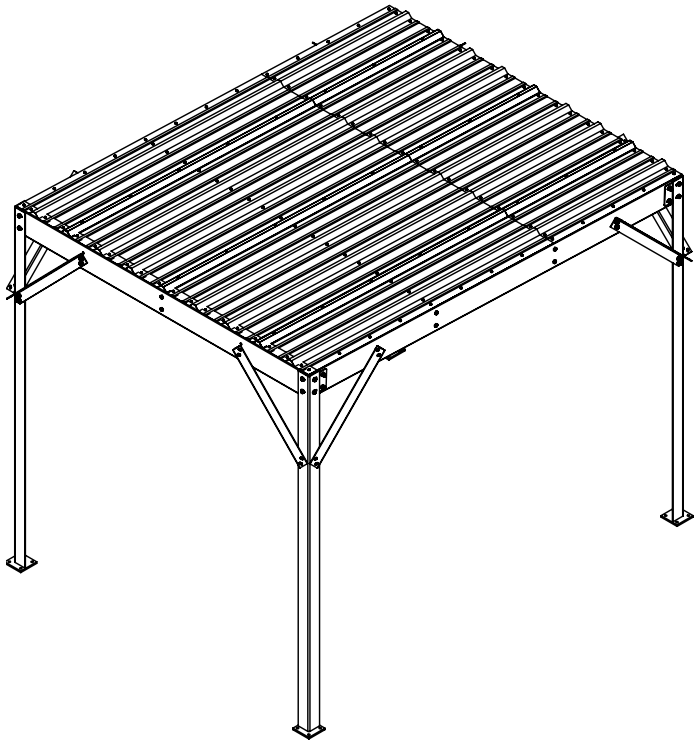

302" X 130" Pad Mount Solar Canopy Frame for WIC and Generator

Part Number
AT&T- CEQ.59800 **EMI-** 1001-0030-0097 ⭳
⭳ Click the **EMI** part number to download drawing.
Description
302" x 130" Concrete mounted canopy frame kit for use with solar panel mounting kits below.

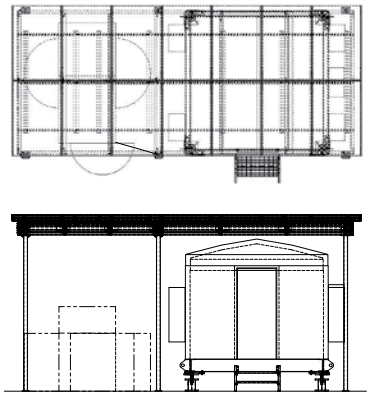

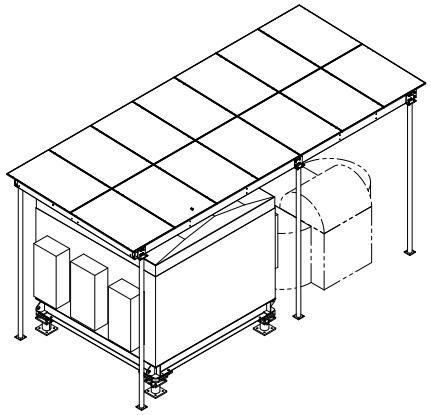

Solar Panel Mount Kit for 1001-0030-0097

Panel Model	Part Number	MAX QTY
MITREX M405-LH3 / M405-I3H	**AT&T-** CEQ.60944 **EMI-** 1000-0030-0241 ⭳	14
⭳ Click the **EMI** part number to download drawing.		

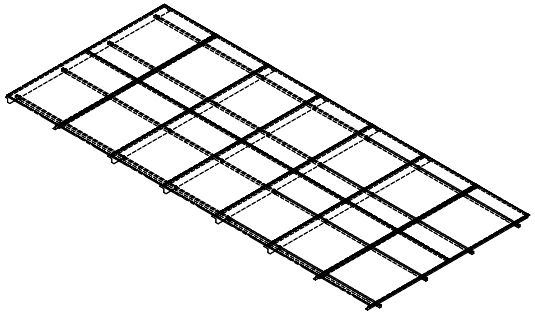

WIC Concrete Mount
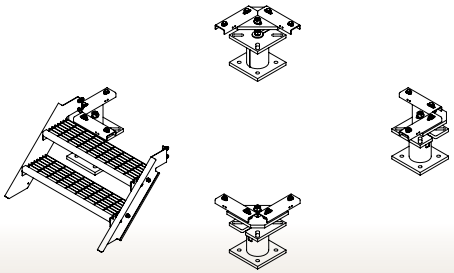
Part Number
AT&T- CEQ.53655 **EMI-** 1007-0000-0012 ⭳
⭳ Click the **EMI** part number to download drawing.
Description
WIC pad mount corner kit, 17" mounting feet, 2-step stair with leveling hardware.